TOPCON SUPER DM
(72A)
GUIDE for REPAIR

1974 — May

TOKYO KOGAKU KIKAI K.K

TOKYO JAPAN

SKETCH	STEPS IN DISASSEMBLING

Fig. 1

Fig. 2

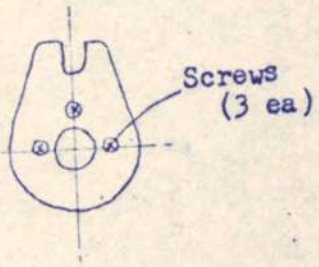

Fig. 3

Fig. 4

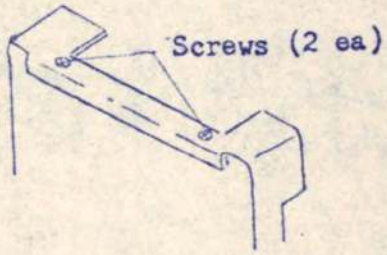

Fig. 5

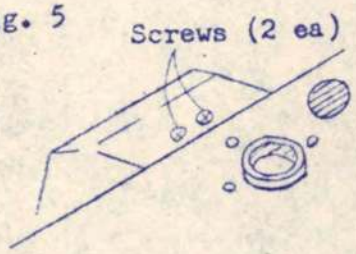

Fig. 6

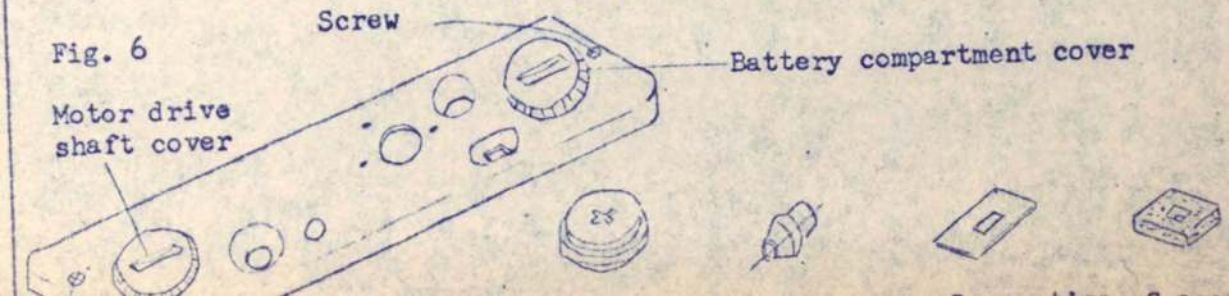

Detaching the Front Cover Plate

1. Detach the lens locking lever. (Fig.1)
   Unscrew its fixing screw(32A 4007).

   CAUTION

   Be careful, as the spring (32A 4008) may be lost.
2. Detach the tripod socket plate.(Fig.2)
   Unscrew its three fixing screws.
3. Detach the mirror lock-up lever.
   Unscrew its fixing screw(56A 3053), by using 32A 9023-T. (Fig.3)

   CAUTION

   If detached while mirror is locked up, shaft may drop inside body.
   This is not required after improvement.
4. Detach the front cover plate. (Fig.4)
   Unscrew two fixing screws on top.
   Also, unscrew two fixing screws on the bottom. (Fig.5)

Detach the Bottom Cover Plate

1. Unscrew two fixing screws at both ends. (Fig.6)
2. Unscrew the battery compartment cover and the motor drive shaft cover.
   (with the screw cap driver AA0101)

   CAUTION

The battery, rewind button, cover plate and spacer will become free, at this time, and should be placed aside.

SKETCH	STEPS IN DISASSEMBLING

Fig.1

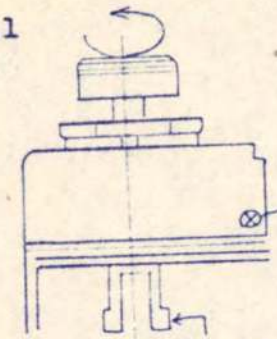

Fig.2

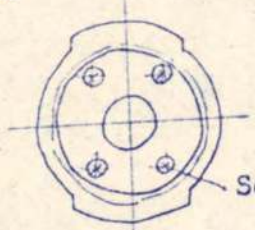

Fig.3

Flash socket ring

Fig.4

Fig.5

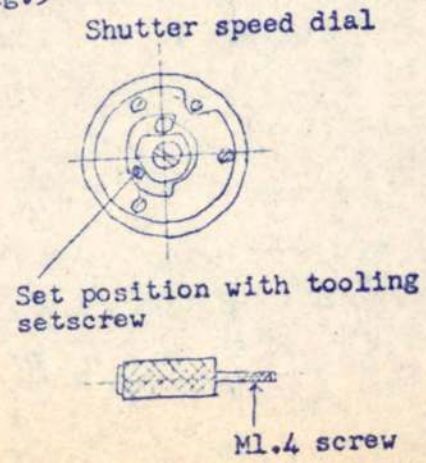

Detaching the Left Top Cover Plate

1. Detach the rewind knob. (Fig.1)
   Hold the slotted end of the rewind shaft with the rewind shaft holder (32A 1330-T) and revolve the rewind knob in the counter-clockwise direction.
2. Unscrew one fixing screw. (Fig.1)
3. Detach the flash unit bayonet assembly. (Fig.2)
   Unscrew four fixing screws.
4. Detach the left top cover plate.
   Detach the flash socket ring with the plate wrench (32A 1503-T). (Fig.3)

Detaching the Right Top Cover Plate

1. Set the film speed plate to its maximum setting. (Fig.4)
   Set ASA 1600 and DIN 33 in the window.
2. Set the shutter speed dial to B.
3. Detach the shutter speed dial plate.
   Unscrew one fixing screw. (Fig.4)

   CAUTION

   1) Do not lift up the shutter speed dial, as the pulleys and gears inside the body will revolve because of the spring tension. This will result in a change of relationship in the coupling with the ASA film speed scale and, furthermore, will damage the exposure meter.
   2) Detach the shutter speed dial after fixing the pulleys and gears from moving with the tooling setscrew (46A 5090-T or M1.4 x 8S).
4. Set the positions of the pulley and gears.
   Use the tooling setscrew (46A 5090-T) or M1.4 x 8S. (Fig.5)

SKETCH	STEPS IN DISASSEMBLING
Fig.1 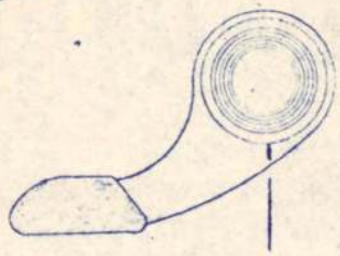	6. Unscrew the winding lever fixing screw. (Fig.1) Use the clamp wrench (AA0108). <u>CAUTION</u> 1) Revolve clockwise as the screw is turned left or counter-clockwise to tighten. 2) Detachment will also be rather difficult because Loc-Tite(Bearing Mount) is used for fixing. On the other hand, remember to use Loc-Tite when assembling.
Fig.2 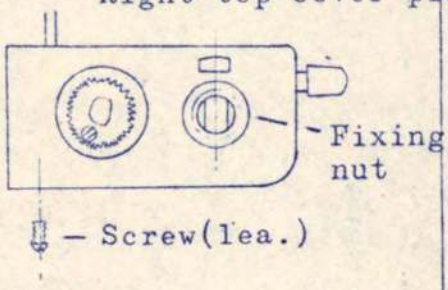	7. Unscrew the fixing nut. (Fig.2) Use the nut holder (71A 2063-T) 8. Detach the right top cover plate. Unscrew one fixing screw. (Fig.2)
	<u>Disassembling the Exposure Meter</u> 1. Detach the rewind shaft. (Fig.3) Detach its holding spring.
Fig.3 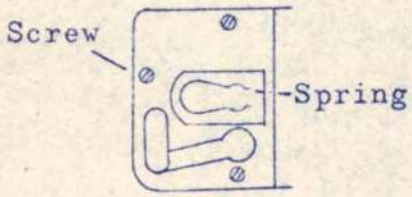 Flash unit bayonet mount base	2. Detach the flash unit bayonet mount base. (Fig.3) Unscrew its three fixing screws.
	3. Set the shutter speed dial to 1/1000 sec.(to coincide the indented curved radius of the pulley gear with the outer diameter of the exposure meter) and slip the chain off the No. 4 pulley. (Fig.4)
Fig.4 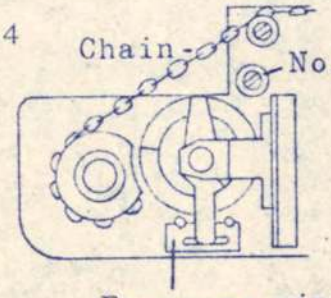	4. Detach the top deck exposure window. Unscrew two fixing screws. (Fig.4)

SKETCH	DISASSEMBLING
Fig.1 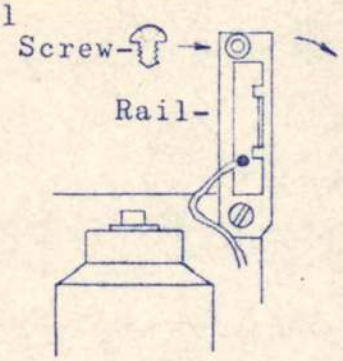	5. Unscrew one rail fixing screw. (Fig.1) 6. Lift up the rail. (Fig.1) CAUTION Do not lift up the exposure meter as the meter will then become detached from its gear and revolve(due to spring tension), thus bending the meter needle. 7. Detach the exposure meter. Hold the exposure meter firmly and lift it up. Detach the spring, at its point of attachment to the meter, and then detach the meter. (Fig.2)
Fig.2 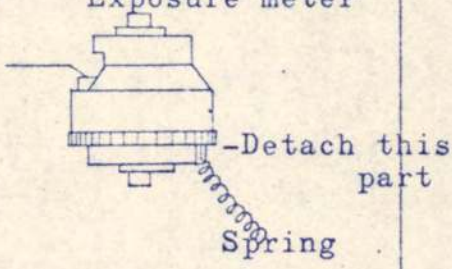	

SKETCH	STEPS IN DISASSEMBLING
Fig.1 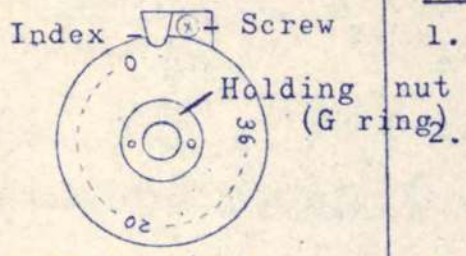 Exposure counter dial plate	<u>Disassembling the Exposure Counter</u> 1. Detach the index. (Fig.1) Unscrew one fixing screw. 2. Detach the holding nut. (Fig.1) Detach the G-ring with the special plier (71A 2093-T) 3. Detach the exposure counter dial plate. Lift it up, after detaching the spring fixed to the winding shaft assembly plate. (Fig.1)
Fig.2 Winding shaft assembly plate 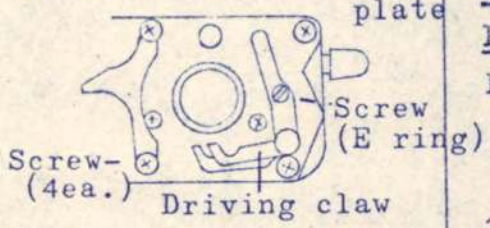 	<u>Disassembling the Winding Shaft Assembly Plate</u> 1. Detach the driving claw. (Fig.2) Unscrew one fixing screw. (Detach the E-ring) 2. Detach the winding shaft assembly plate. (Fig.2) Unscrew four fixing screws.
Fig.3 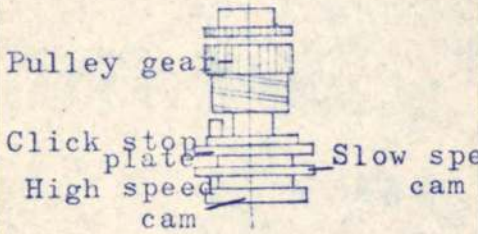 Shutter speed cam ass'y	<u>Dismantling the Shutter Speed Cam Assembly</u> (Fig.3) 1. Slip off the chain. (Fig.4) <u>CAUTION</u> When dismantling the shutter speed cam assembly without disassembling the exposure meter, first, fix the chain to the No.2 pulley with a fine piece of wire before slipping the chain off the pulley gear.
Fig.4 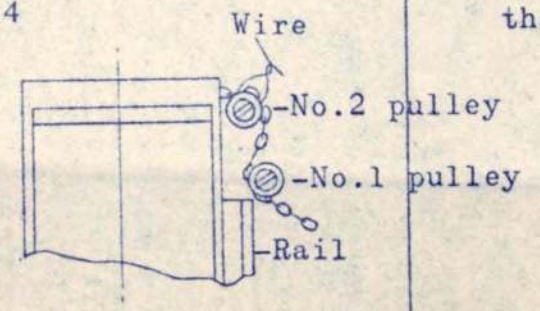 	

SKETCH	STEPS IN DISASSEMBLING
Fig.1 No.1 pulley holder 	2. Detach the No.1 pulley. (Fig.1) Unscrew one of the fixing screws of the No.1 pulley holder and lift up the pulley. 3. Detach the right rail. (Fig.2) Unscrew two fixing screws of the rail. 4. Detach the shutter speed cam ass'y. Unscrew the single fixing screw. (Fig.3)
Fig.2 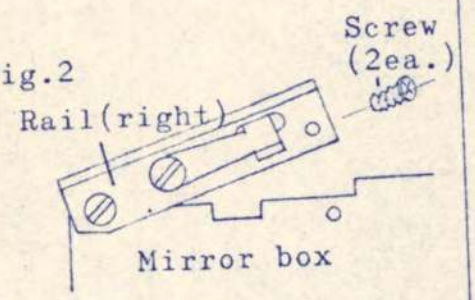 	<u>CAUTION</u> When dismantling the shutter speed dial, by loosening three setscrews, first, place the following alignment marks (A) and (B), as this will prove convenient for reassembling. (Fig.4) (A) alignment: between shutter speed dial gear and high speed cam. (B) alignment: between shutter speed dial gear and pulley gear(set to ASA 800 or ASA 1600).
Fig.3 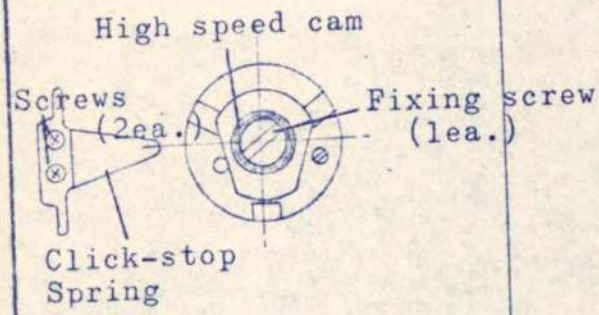 	5. Detach the click-stop spring.(Fig.3) Unscrew two fixing screws.
Fig.4 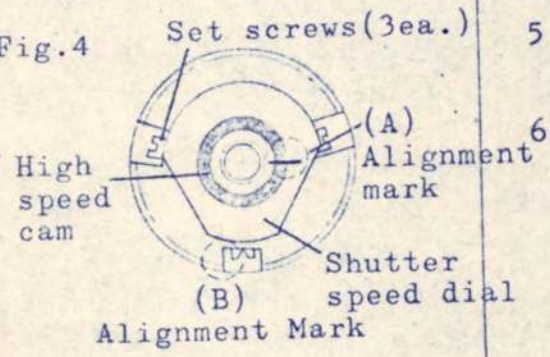 	6. Detach the shutter speed cam.(Fig.5) Move the lever of the F-X synchro-switch assembly plate, as indicated by the arrow, and then rotate the cam so that the cutaway section of the cam is placed on the lever side, at which point, pull the cam out softly.
Fig.5 <u>F-X synchro-switch assembly plate</u> 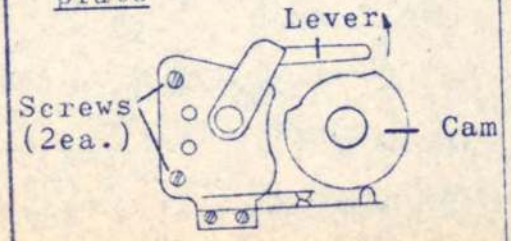 	<u>Detaching the F-X Synchro-Switch Assembly Plate</u> (Fig.5) Unscrew two fixing screws.

SKETCH	STEPS IN DISASSEMBLING
Fig.1 Retard Gear Train ass'y 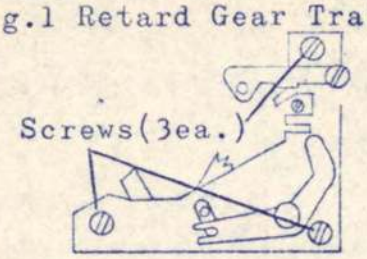	<u>Detaching the Retard Gear Train Ass'y.</u> Unscrew three fixing screws. (Fig.1) <u>Dismantling the Triangular Prism</u> Unscrew two fixing screws. (Fig.2)
Fig.2 Triangular prism 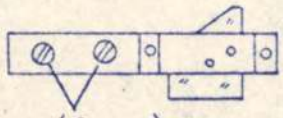	<u>Detaching the Mirror Box</u> 1. Detach the left rail. Unscrew two fixing screws. 2. Unscrew two fixing screws. (Fig.3) 3. Disconnect the CdS lead wires.(Fig.4) a) Detach one side of the shunt resistor. b) Disconnect the black, green and white lead wires. c) Soft detach that part attached to the body.
Fig.3 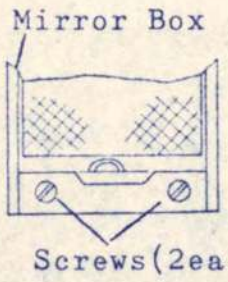	4. Detach the lens diaphragm coupling gear. (Fig.5) Move the lens diaphragm coupling lever to the left (to its limit) and scribe a line on the lens diaphragm coupling gear and the edge of the mirror box. Then, unscrew the fixing screw.
Fig.4 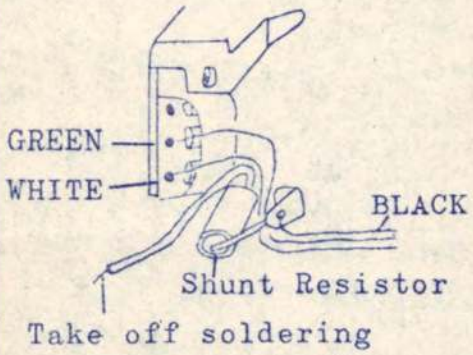	5. Detach the lens mount. Unscrew four fixing screws. Detach the spring on the side of the T-lever.
Fig.5 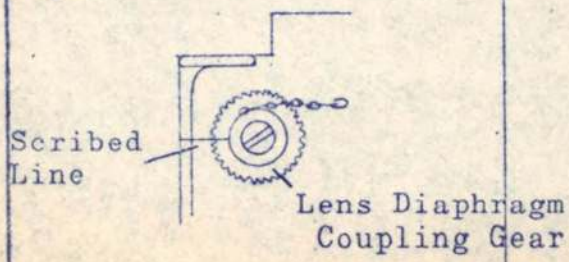	

SKETCH	STEPS IN DISASSEMBLING
Fig.1 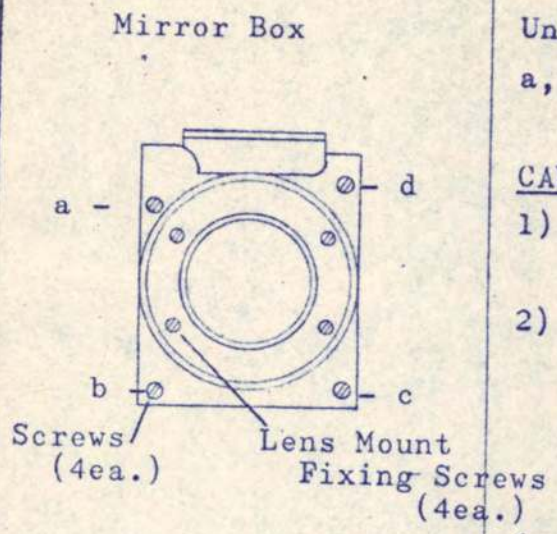 	Unscrew the four screws designated a, b, c, and d. (Fig.1) CAUTION 1) Adjustment washers are inserted below the screws. 2) In order that the washers can be re-inserted in their original positions, mark them a, b, c, and d. 6. Detach the mirror box. (Fig.2) a) Lift up the reflex mirror and detach while pressing on the reflex mirror. b) Take off the focusing screen pressure spring. Use care in detachment so that it is not dropped inside the focal plane shutter mechanism.
Fig.2 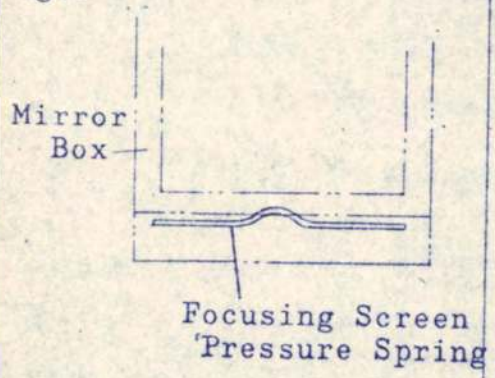 	

SKETCH	STEPS IN DISASSEMBLING
Fig.1 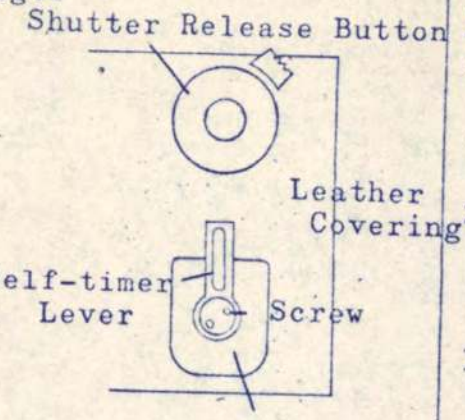 	<u>Dismantling the Slf-Timer Assembly</u> 1. Detach the self-timer lever. (Fig.1) Unscrew the fixing screw, with the special screwdriver (56A3053-T). 2. Detach the self-timer cover. (Fig.2) Unscrew the holding nut with the special screwdriver (32A 9023-T). 3. Peel off the leather covering. Peel off enough to show the four fixing screws of the self-timer.
Fig.2 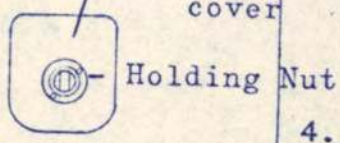 	4. Detach the self-timer. (Fig.3) Detach while pressing the shutter release plate downwards.
Fig.3 Self-timer assembly 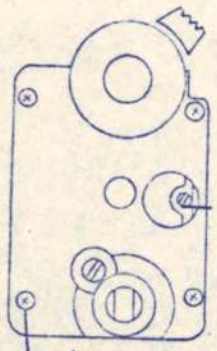 	<u>Detaching the Tripod Socket Plate</u> 1. Detach the tripod socket plate. (Fig.4) a) Unscrew four fixing screws. (Differing from the RE Super(46A), the tripod socket plate will be detached completely because it is not connected with the synchro contact assembly.) b) Detach the shutter release returning spring plate.
Fig.4 Tripod Socket Plate 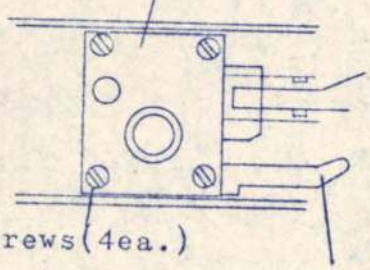 	

10 Meter system (1)

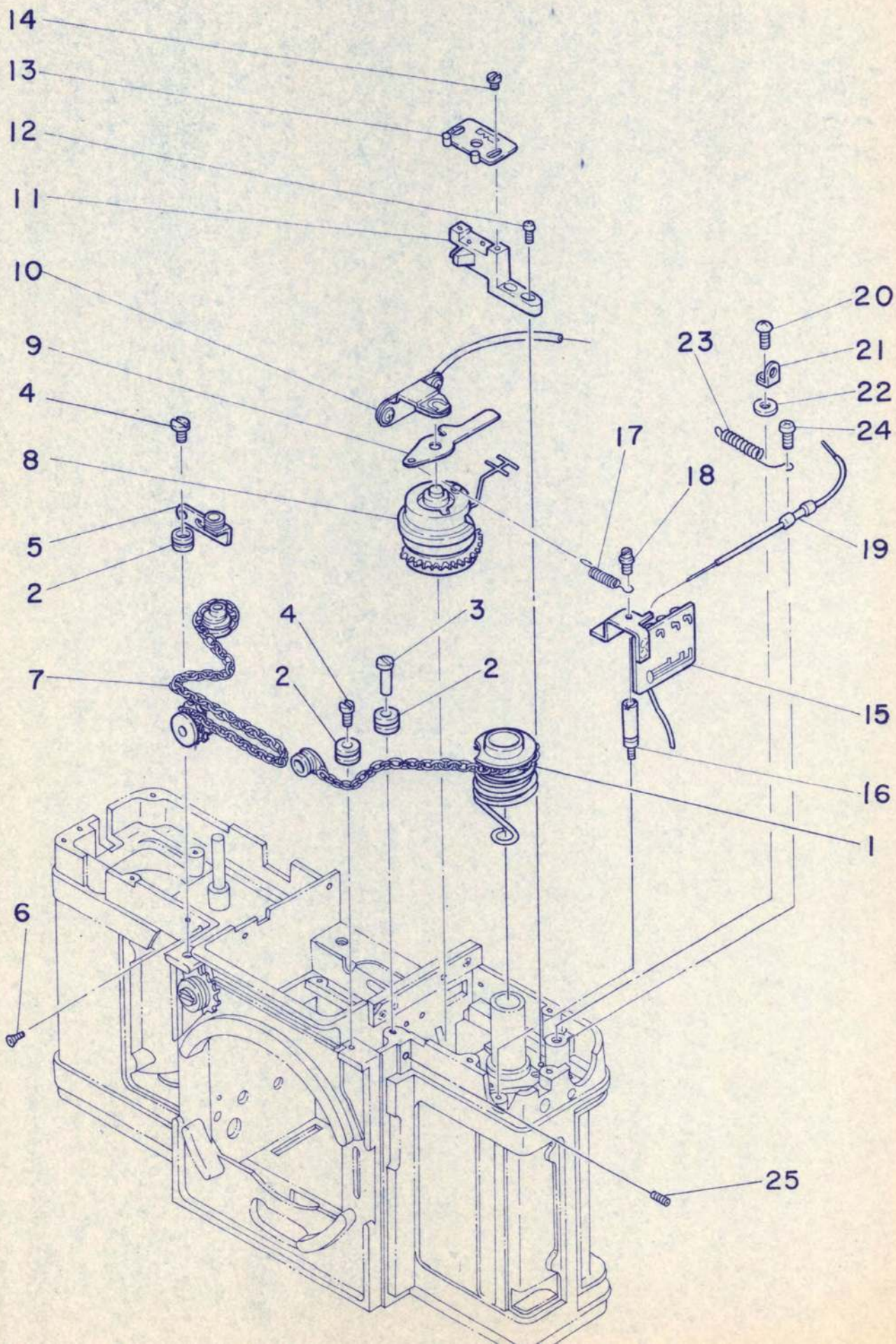

No.	Parts No.	Parts Name	Quantity	Price	Remarks
(1)	71A 10610	Switch ass'y	1		
(2)	46A 7028	Print resistor ass'y	1		
(3)	46A 7036	Shunt resistor (Give the value of resistor)	1		
(4)	46A 7002	Meter	1		
(5)	46A 7001	Cds	1		
6	46A 7047	Sheat	1		

11 Meter system (2)

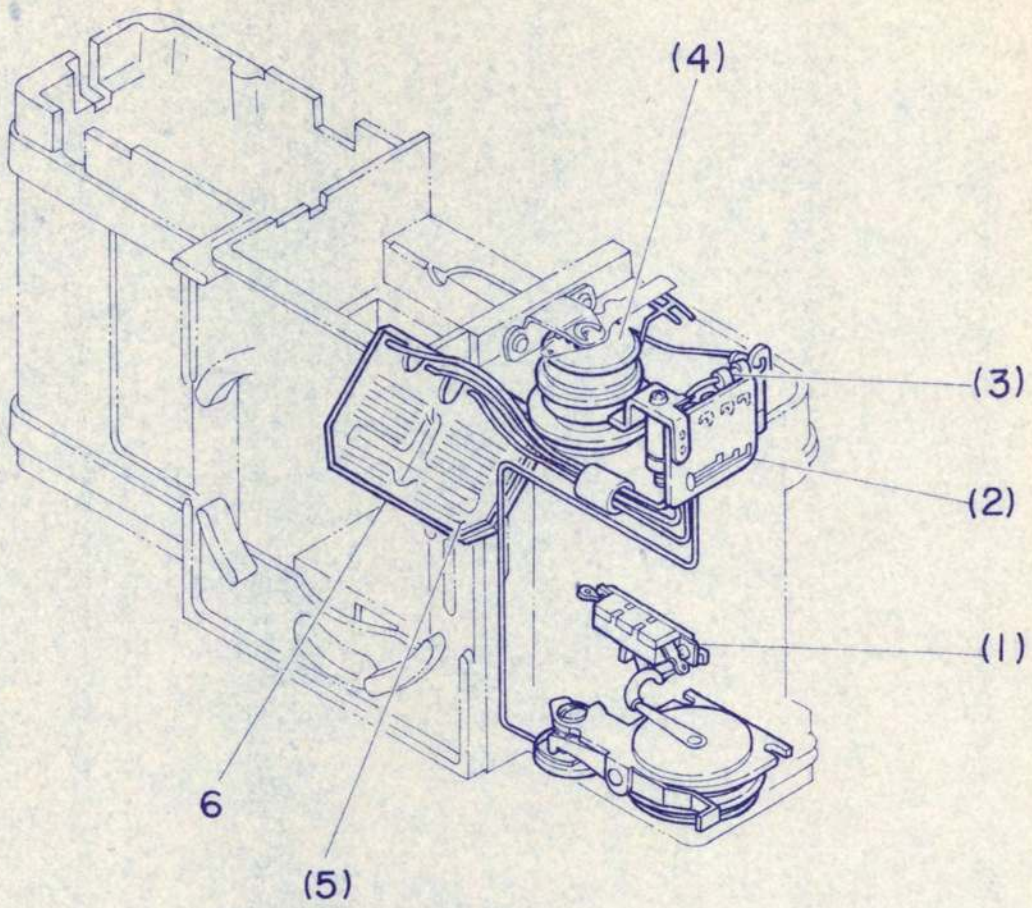

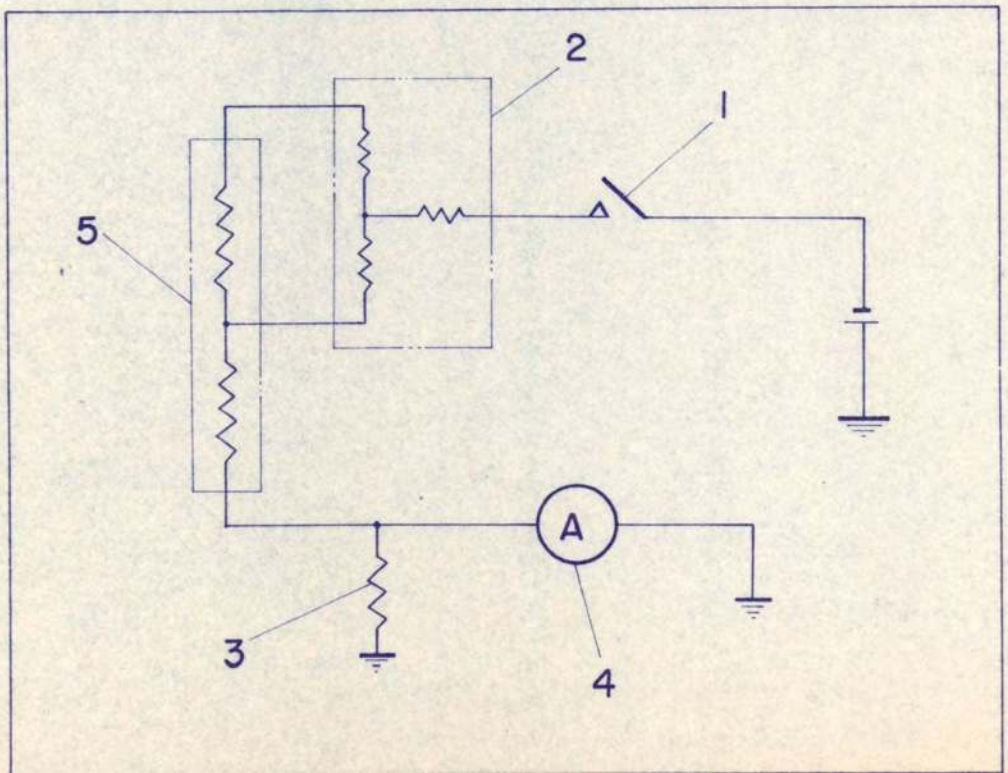

No.	Parts No.	Parts Name	Quantity	Price	Remarks
1	71A 15100	Flash socket ass'y	1		
2	CQsl.4x2.5SxNi	Screw	2		
3	72A 15050	Whole base ass'y	1		
4	CQsl.7x4SxNi	Screw	2		
5	71A 15210	Plate ass'y	1		
6	CRsl.7x3SxNi	Screw	2		
7	71A 1085	Tape	1		
8	CR1.7x3.5SxNi	Screw	2		
9	72A 15480	Shutter switch ass'y	1		

12 Flash synchronization

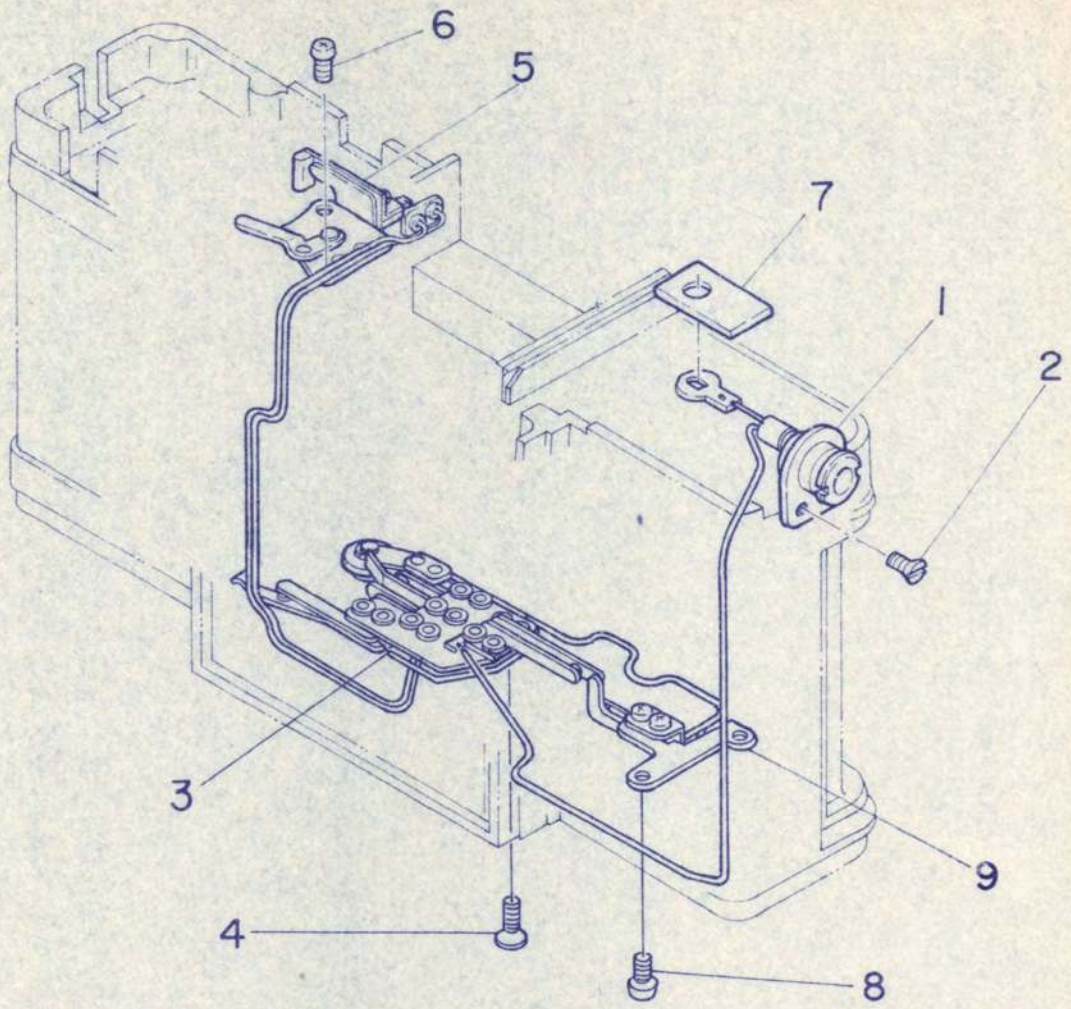

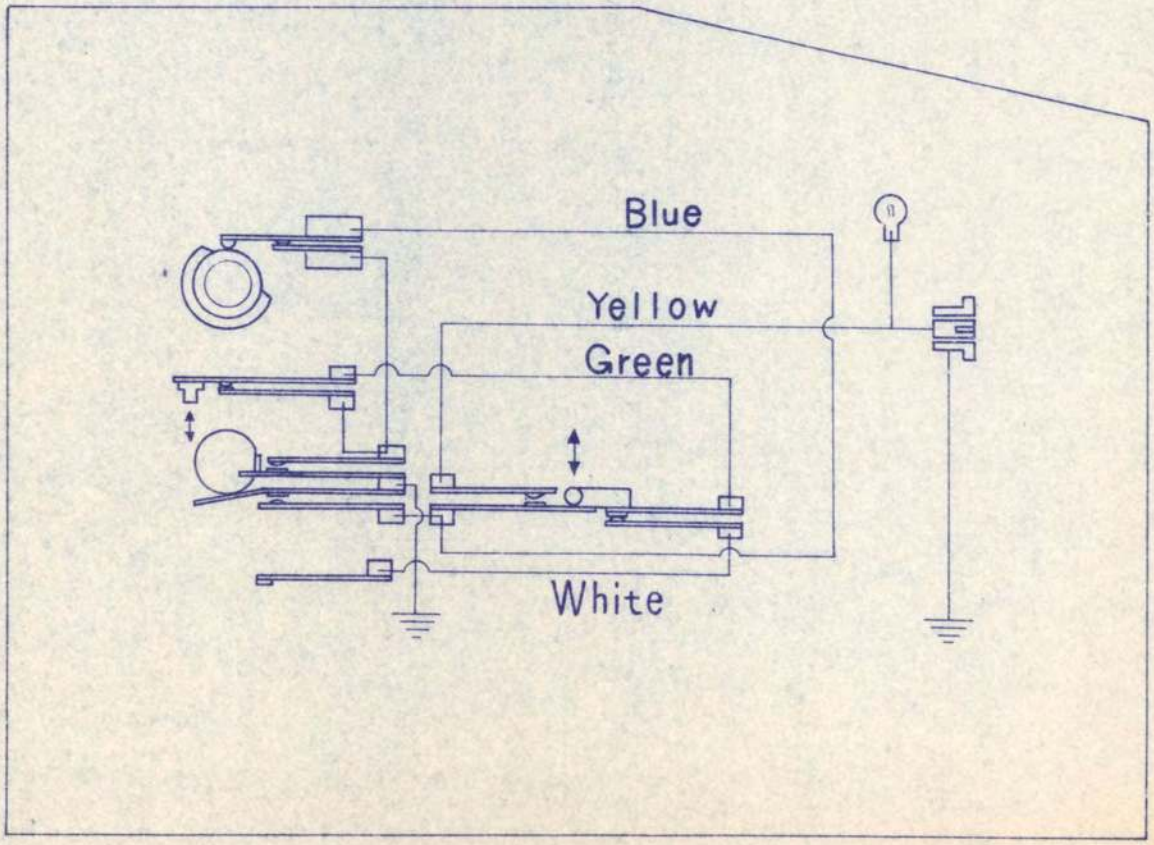

No.	Parts No.	Parts Name	Quantity	Price	Remarks
1	72A 60010	Back cover ass'y	1		
2	68A 60080	Pressure plate ass'y	1		
3	72A 61000	Back cover unit	1		
(4)	32A 6017	Leather	1		

13 Back cover

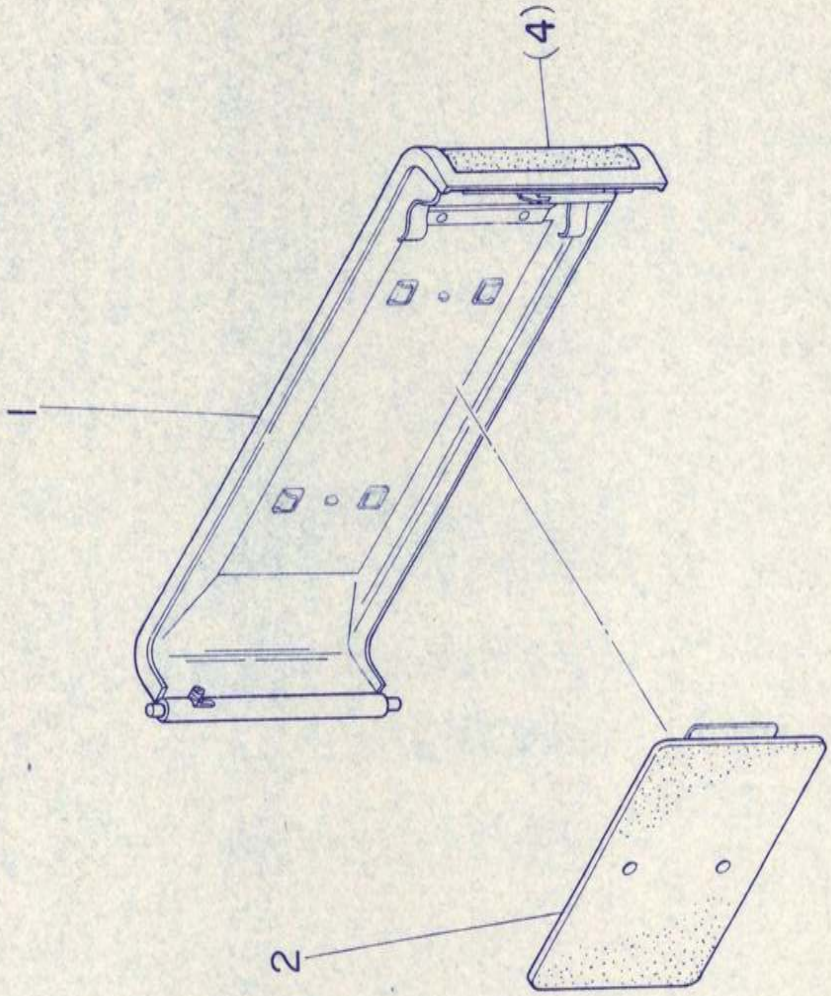

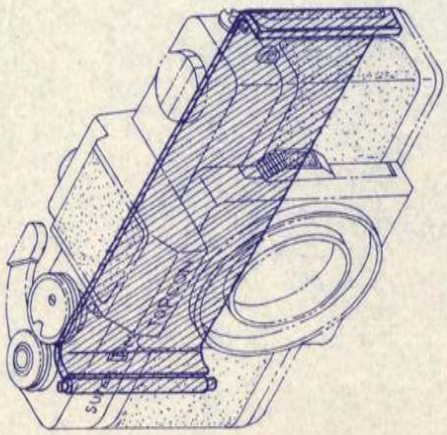

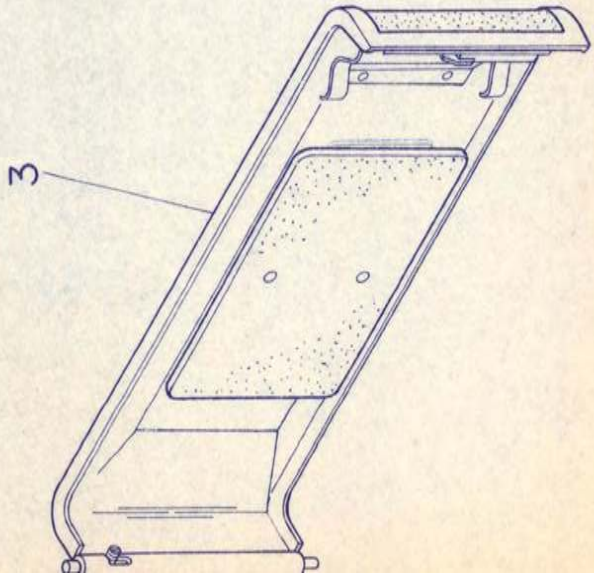

No.	Parts No.	Parts Name	Quantity	Price	Remarks
1	72A 80010	Penta-prism box ass'y	1		
2	72A 80180	Prism ass'y	1		
3	72A 8017	View flame	1		
4	72A G4	Glass	1		
5	72A 80080	Light shield flame ass'y	1		
6	CRs1.4x3SxBZn	Screw	2		
7	72A 81020	Long prism ass'y	1		
8	72A G2	Penta-prism	1		
9	72A 80020	Cover ass'y	1		
10	CR1.4x2SxBCr	Screw	2		
11	72A 80030	Eyepiece lens ass'y	1		
12	32A 8004	Eyepiece ring	1		
13	46A 8101	Rubber ring	1		

14 Penta prism finder

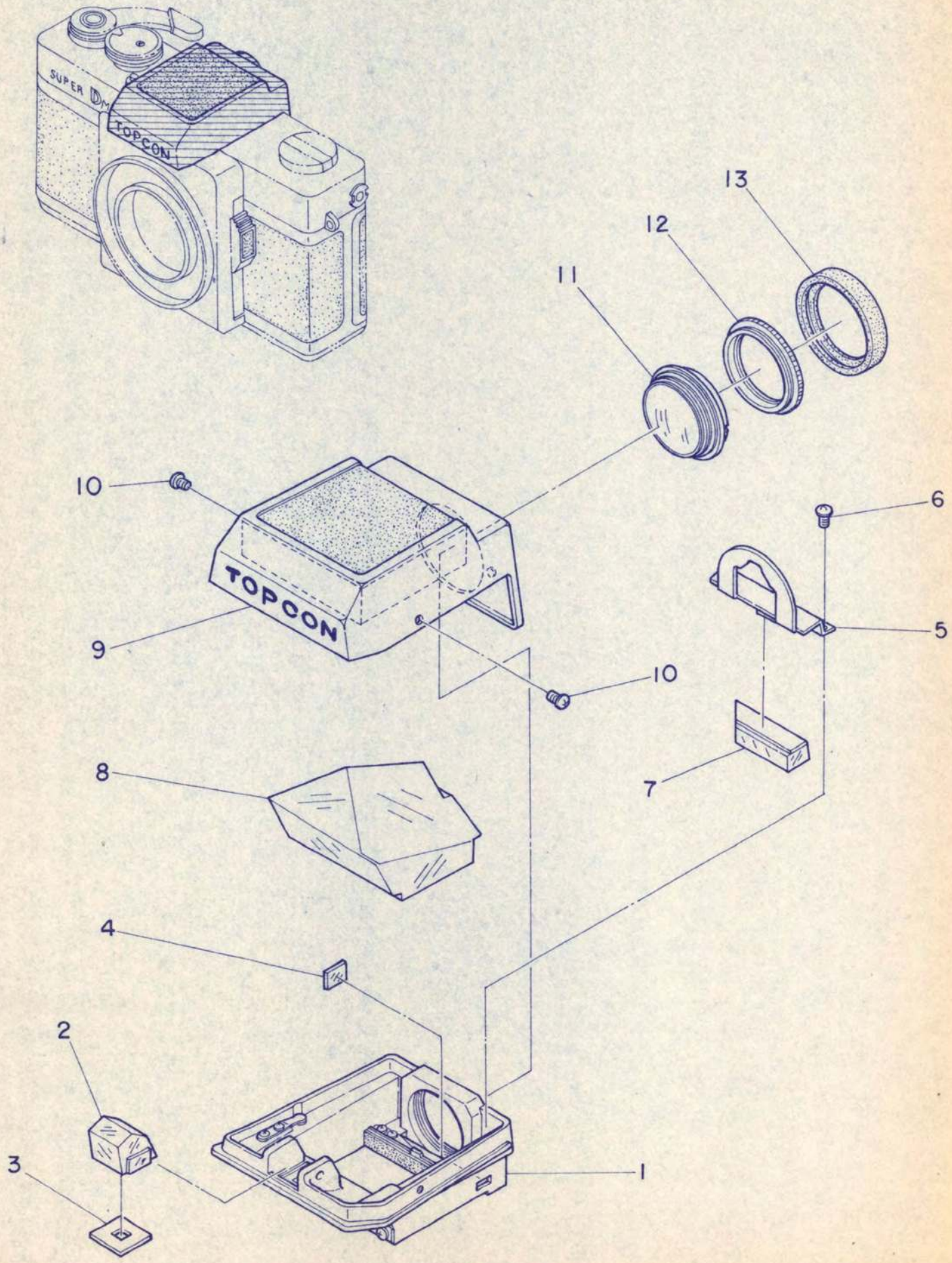

Parts List (Glass Parts)

Parts No.	Parts Name	Page	No.	Remarks
32A G2	Ground glass	21	42	
32A G3	Condenser lens	21	44	
46A G1	Mirror	17	12	
72A G2	Penta-prism	31	8	
72A G4	Grass	31	4	

SKETCH	STEPS IN DISASSEMBLING
Fig. 1 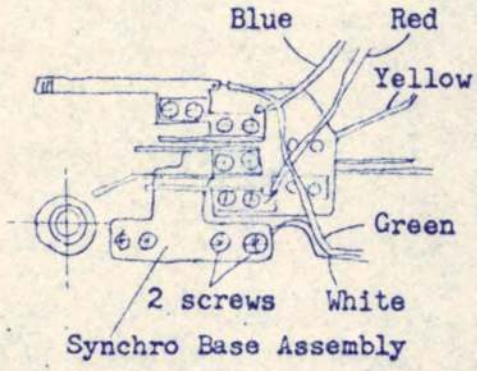 	<u>Detaching the Synchro Base Assembly</u> Detach the synchro contact assembly. (Fig.1) Unscrew two fixing screws. <u>CAUTION</u> For exchanging synchro contacts only, disconnect the solderings of the red, blue, yellow and green lead wires and leave these lead wires, as they are.
Fig. 2 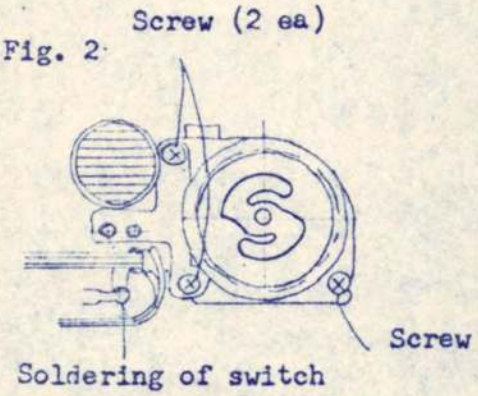 	<u>Detaching the 2nd Shutter Curtain Contact</u> Detach the 2nd shutter curtain contact. (Fig.2) Unscrew two fixing screws and disconnect the soldering of green and white lead wires.
Fig. 3 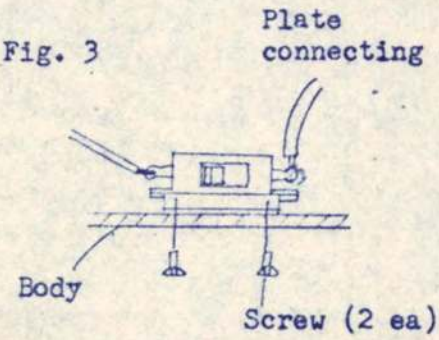 	<u>Detaching the Battery Compartment</u> Detach the battery compartment. (Fig.2) Detach the 2nd shutter curtain contact. Unscrew three fixing screws. Disconnect the soldering of the switch. <u>Detaching the Battery Switch</u> Detach the battery switch. (Fig.3) Unscrew two fixing screws. <u>CAUTION</u> When exchanging the switch only, disconnect the solderings of one lead wire and the connecting plate.
Fig. 4 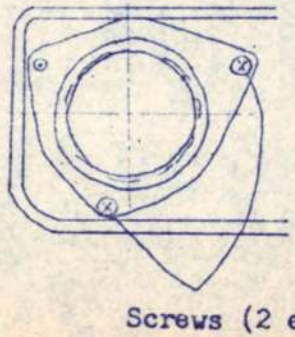 	Dismantling the Focal Plane Shutter Assembly 1. Unscrew two fixing screws. (Fig.4) Detach the triangular plate.

Parts List (Original Parts)

Parts No.	Parts Name	Page	No.	Remarks
72A 10020	Topcover(right)ass'y white	1	2	
72AE10020	Topcover(right)ass'y black	1	2	
72A 10030	Topcover(left)ass'y white	1	3	
72AE10030	Topcover(left)ass'y black	1	3	
72A 1004	Bottom cover white	1	23	
72AE1004	Bottom cover black	1	23	
32A 1005	Shoulder strap hock	1	8	
71A 1006	Back cover hinge	1	10	
71A 1007	Back cover hinge	1	12	
32A 1011	Counter plustic	1	4	
32A 10130	Slide plate ass'y	15	1	
32A 1014-A	Adjusting screw D=1.5$^{\phi}$	15	2	
32A 1014-B	Adjusting screw D=2$^{\phi}$	15	2	
32A 1014-C	Adjusting screw D=2.5$^{\phi}$	15	2	
71A 10170	Shutter button ass'y	15	5	
71A 1026	Adjusting lever	15	3	
32A 1029	Screw	15	4	
46A 1031	Base	3	6	
46A 1032	Metal	3	9	
32A 10330	Rewind shaft ass'y	3	11	
32A 1037	Nut	3	2	
32A 1038	Spring	3	8	
71A 10390	Flash unit bayonet ass'y white	3	5	
71AE10390	Flash unit bayonet ass'y black	3	5	
32A 1043	Disc	3	3	
71A 10440	Rewind knob ass'y white	3	1	
71AE10440	Rewind knob ass'y black	3	1	
71A 10520	Tripod socket bace	1	19	
32A 1053	Base white	1	26	
32AE1053	Base black	1	26	
71A 10540	Battery base ass'y white	9	3	
71AE10540	Battery base ass'y black	9	3	
71A 10610	Switch ass'y	9, 25	13 (1)	
71A 1062	Plustic tube	9	12	
71A 1063	Back cover lock	9	11	
32A 10660	Button white	9	5	

Parts List (Original Parts)

Parts No.	Parts Name	Page	No.	Remarks
32AE10660	Button black	9	5	
32A 1068	Spring	9	6	
32A 1069	Screw	9	7	
32A 1071	Motor drive attachment screw	9	9	
32A 1072	Motor drive shaft cover	9	8	
46A 1072	Battery compartment cover	9	1	
71A 1073	Lock plate	1	13	
32A 1074	Screw	1	14	
32A 1075	Screw	1	16	
32A 1076	Spring	1	15	
32A 1077	Cover	1	17	
32A 1078	Leather (left)	1	22	
71A 1079	Leather (right)	1	21	
32A 1081	Cloth	1	28	
32A 1082	Ribbon	17	33	
71A 1085	Tape	27	7	
32A 1086	Moltplene	1	29	
46A 1101	Battery	9	2	
72A 1123	Indicator prism	1	6	
71A 1145	Staraplug ring left	1	7	
71A 1151	Lug plate	3	12	
72A 1154	Staraplug ring right	1	30	
32A 1503	Flash socket ring	1	1	
72A 15050	Whole base ass'y	27	3	
71A 15100	Flash soket ass'y	27	1	
71A 15210	Plate ass'y	27	5	
72A 15480	Shutter switch ass'y	27	9	
71A 2002	Washer	5	2	
71A 20040	Spool ass'y	5	12	
32A 2005	Screw	5	21	
71A 20080	Gear ass'y	5	22	
71A 20130	Winding shaft ass'y	5	13	
32A 20170	Disc ass'y	5	17	
32A 2019	Screw	5	18	
71A 2022	Plate	5	19	
71A 2023	Metal (bottom)	5	14	
71A 20320	Sprocket shaft ass'y	5	28	
71A 2036	Rewind button	5	31	
71A 2037	Plate	5	29	

Parts List (Original Parts)

Parts No.	Parts Name	Page	No.	Remarks
71A 2038	Metal	5	25	
32A 2041	Rewind lever	5	33	
32A 2042	Spring	5	32	
32A 2043	Screw	5	24	
71A 20450	Winding ass'y	5	7	
71A 2063	Nut white	5	6	
71AE2063	Nut black	5	6	
71A 2064	Clutch	5	5	
71A 20650	Winding lever white	5	3	
71AE20650	Winding lever black	5	3	
71A 2066	Screw	5	1	
71AE2066	Screw	5	1	
71A 2068	Lever ass'y	5	11	
71A 2072	Screw	5	9	
71A 2073	Spring	5	10	
71A 20810	Lever ass'y	5	15	
71A 2096	Washer	5	27	
71A 2102	Sprocket	5	26	
71A 3001	Shaft	7	24	
71A 3002	Screw	7	14	
71A 30030	Set lever ass'y	7	17	
71A 30050	Main spring lever ass'y	7	20	
71A 30070	Main spring ass'y	7	19	
71A 30090	T-shaped lever ass'y	7	22	
32A 3011	Screw Dia=1.7mm	13	38	
32A 3011-6-G	Screw Dia=2.0mm	13	38	
71A 30120	Release clutch	7	28	
72A 30130	Spring	7	16	
71A 3019	Spring	7	23	
71A 3021	Spring	7	27	
32A 3023	Eccentric ring	7	31	
71A 30240	Crank lever ass'y	7	6	
71A 3029	Screw	7	5	
32A 3032	Gear shaft	7	4	
32A 3033	Gear	7	3	
32A 3034	Safety plate	7	2	
32A 30360	Clutch gear ass'y	7	13	

Parts List (Original parts)

Parts No.	Parts Name	Page	No.	Remarks
32A 3041	Clutch gear	7	12	
72A 30420	Safety lever ass'y	7	11	
32A 3044	Lever	7	9	
32A 3045-A	Eccentric ring	7	8	
32A 3045-B	Eccentric ring	7	8	
32A 3046	Spring	7	10	
32A 3047	Plate spring	7	25	
72A 3053	Spring	7	32	
72A 4002	Front cover (white)	21	35	
72AE4002	Front cover (black)	21	35	
72A 40030	Bayonet mount ass'y-white	19	25	
72AE40030	Bayonet mount ass'y-black	19	25	
71A 40040	Catch lever white	19	27	
71AE40040	Catch lever black	19	27	
32A 4007	Screw	19	28	
32A 4008	Spring	19	26	
32A 40110	Spring ass'y	21	34	
71A 40150	Lever ass'y	17	26	
71A 4016	Spring	17	30	
71A 4017	Screw	17	3	
71A 4021	Mirror holding lever ass'y	17	23	
71A 4022	Screw	17	24	
71A 4023	Spring	17	25	
71A 4025	Plate	17	31	
71A 4029	Screw	17	29	
71A 4032	Light shield	17	1	
32A 4033	Frame	17	13	
71A 40340	Mirror plate ass'y	17	4	
32A 4038	Washer	17	9	
32A 4039	Spring	19	20	
32A 4044	Pin	17	5	
32A 40450	Rail ass'y (right)	19	8	
46A 40460	Rail ass'y (left)	19, 23	12, 10	
32A 4049	Spring	19	11	
32A 4052	Screw	19	9	
32A 4053	Spring	19	17	
32A 4054	Cover	19	18	

Parts List (Original Parts)

Parts No.	Parts Name	Page	No.	Remarks
32A 40550	Spring ass'y	19	16	
32A 4056	Catch	19	15	
32A 4057	Screw	17	21	
32A 4058	Spring	17	17	
71A 4059	Depthot preview button	17	18	
32A 4061	Spring	17	22	
71A 4062	Depth of preview lever	17	15	
32A 4063	Cover	21	47	
32A 4064	Box	21	41	
32A 40640	Focusing screen	21	49	
32A 4065	Spacer	21	46	
32A 4066	Mask	21	39	
32A 4067-A	Washer t=0.1	21	38	
32A 4067-B	Washer t=0.15	21	38	
32A 4067-C	Washer t=0.2	21	38	
32A 4067-D	Washer t=0.25	21	38	
32A 4067-E	Washer t=0.3	21	38	
32A 4067-F	Washer t=0.5	21	38	
32A 4074	Washer	17	8	
32A 4077	Cloth cover	17	7	
72A 40780	Lever	19	2	
71A 4082	Spring	19	4	
72A 40830	Cam	19	5	
72A 4086	Mirror up crank lever	19	6	
71A 4087	Plate	19	1	
72A 4088	Mirror up lever - white	21	54	
72AE4088	Mirror up lever - black	21	54	
72A 4089	Collar	21	53	
72A 4091	Wire	21	52	
46A 4101-A	Segmental gear t=2.2	19	29	
46A 4101-B	Segmental gear t=2.3	19	29	
46A 4101-C	Segmental gear t=2.4	19	29	
46A 4101-D	Segmental gear t=2.5	19	29	
46A 4101-E	Segmental gear t=2.6	19	29	
46A 4103	Screw	19	24	
46A 4104	Stopper	21	32	
46A 41050	Frame ass'y	19	13	

Parts List (Original Parts)

Parts No.	Parts Name	Page	No.	Remarks
46A 4107	Tape	21	45	
46A 4109	Spacer	21	43	
72A 4112	Stopper	21	30	
46A 4113	Screw	19	14	
71A 4116	Leather	17	20	
72A 50010	Shutter base ass'y	11	14	
71A 50060	Speed cam ass'y	11	11	
71A 50090	Gear ass'y	11	6	
71A 50120	Speed ring ass'y	11	5	
71A 5013	Speed scale	11	2	
32A 5023-A	Screw DΦ=2.3	11	16	
32A 5023-B	Screw DΦ=2.5	11	16	
32A 5023-C	Screw DΦ=2.7	11	16	
32A 5023-D	Screw DΦ=2.9	11	16	
32A 5023-E	Screw DΦ=3.1	11	16	
32A 5023-F	Screw DΦ=1.7	11	16	
32A 5023-G	Screw DΦ=1.9	11	16	
32A 5023-H	Screw DΦ=2.1	11	16	
32A 5026	Screw	7, 11	15, 19	
32A 5027	Screw	11	18	
32A 5028	Spring	11	17	
72A 5034	Spring	11	12	
32A 5049	Metal	11	22	
32A 5051	Metal base	11	23	
32A 5052	Ring	11	24	
32A 5055	Pawl	13	31	
32A 5056	Screw	11	21	
71A 50570	Synchro ring ass'y	13	33	
32A 5059	Spring	13	42	
32A 5061	Screw	13	39	
32A 50630	Stopper ass'y	13	36	
32A 5064	Bouneing prevention lever	13	40	
32A 5065	Spring	11	30	
32A 5066	Screw	11	29	
46A 5067	Plate	13	44	
32A 5079	Pulley	13	47	

Parts List (Original Parts)

Parts No.	Parts Name	Page	No.	Remarks
32A 5081	Collar	13	49	
32A 5082	Ratcket wheel	13	50	
71A 5083	Pawl	13	51	
32A 5091	Ring	13	41	
32A 5092	Screw	13	43	
71A 51000	Main shaft ass'y	11	20	
46A 51010	Gear and Chain ass'y	11, 23	9, 7	
46A 5104	Ring	11	10	
46A 5107	Spring	11	4	
71A 51080	Film speed plate	11	3	
46A 5112	Stopper	11	27	
32A 54000	Retard gear train ass'y	11	25	
72A 60010	Back cover ass'y	29	1	
68A 60080	Pressure plate ass'y	29	2	
32A 6017	Leather	29	4	
72A 61000	Back cover unit	29	3	
46A 7001	Cds	25	(5)	
46A 7002	Meter	23, 25	8, (4)	
46A 70030	Prism and Holder ass'y	23	11	
72A 70040	Window ass'y	23	13	
46A 7005	Black plastic	23	9	
46A 7007	Spring	23	17	
46A 7008	Screw	23	16	
71A 70140	Pulley and Chain ass'y	23	1	
46A 7016	Pulley	23	2	
71A 7019	Eccentric shaft	23	3	
71A 7021	Screw	23	4	
71A 70260	1st Pulley ass'y	23	5	
46A 7028	Print resistor ass'y	23, 25	15,(2)	
71A 7032	Spring	23	23	
46A 7034	Screw	23	14	
46A 70360-A	Shunt resistor (give the value of resistor) R=8KΩ	23, 25	19, (3)	
46A 70360-B	Shunt resistor (give the value of resistor) R=15KΩ	23, 25	19, (3)	
71A 7039	Lug plate	23	21	
46A 7044	Screw	23	18	

Parts List (Original Parts)

Parts No.	Parts Name	Page	No.	Remarks
46A 7047	Sheat	25	6	
46A 7048	Screw	23	20	
71A 7049	Washer	23	22	
72A 80010	Penta-prism box ass'y	31	1	
71A 80020	Cover ass'y	31	9	
32A 80030	Eye piece lens ass'y	31	11	
32A 8004	Eye piece ring	31	12	
46A 80080	Light shield flame ass'y	31	5	
72A 8017	View flame	31	3	
72A 80180	Prism ass'y	31	2	
46A 8101	Rubber ring	31	13	
72A 81020	Long prism ass'y	31	7	
71A 9001	Cover	15	9	
71A 90010	Self timer ass'y	15	6	
71A 9002	Plate	15	13	
32A 9023	Nut - white	15	10	
32AE9023	Nut - black	15	10	
32A 9027	Set lever - white	15	11	
32AE9027	Set lever - black	15	11	
71A 91000	Self timer and shutter button ass'y white	15	14	
71AE91000	Self timer and shutter button ass'y black	15	14	
56A 2103	Ring	5	4	
56A 3053	Screw white	15	12	
56AE3053	Screw black	15	12	
56A 4099	Spring	17	10	
50A 3099-A	Washer t=0.03	19	22	
50A 3099-B	Washer t=0.05	19	22	
50A 3099-C	Washer t=0.1	19	22	
50A 3099-D	Washer t=0.2	19	22	

Parts List (Screw)

Parts No.	Parts Name	Page	No.	Remarks
CQsl.4x2SxBCr	Screw (black)	21	36	
CQSl.4x2SxCr	Screw	21	36	
CQsl.4x2SxNi	Screw	13	35	
CQsl.4x2.5SxBCr	Screw	11	1	
CQsl.4x2.5SxNi	Screw	15,27,23	8,2,6	
CQsl.7xl.8SxNi	Screw	7	33	
CQsl.7x3.5 SxNi	Screw	17	19	
CQsl.7x2.5SxNi	Screw	9,15	14, 7	
CQsl.7x3SxBCr	Screw (black)	1	24	
CQsl.7x3SxCr	Screw	1	24	
CQsl.7x3SxNi	Screw	1,21	18,37	
CQsl.7x4SxBCr	Screw (black)	1	25, 27	
CQsl.7x4SxCr	Screw	1	25, 27	
CQsl.7x4SxNi	Screw	11,27	15,4	
CQsl.7x6SxBCr	Screw (black)	3	4	
CQsl.7x6SxCr	Screw	3	4	
CQs2x4SxNi	Screw	1	20	
CRl.4xl.6SxBZn	Screw	21	48	
CRl.4x2SxBCr	Screw	31	10	
CRl.4x2SxNi	Screw	17, 19	2, 3	
CRl.4x3SxNi	Screw	7	1	
CRl.7xl.8SxBZn	Screw	19	19	
CRl.7x2SxNi	Screw	13	52	
CRl.7x2.2SxBZn	Screw	19	10	
CRl.7x2.5SxNi	Screw	9,21	4,31 33	
CRl.7x3SxNi	Screw	5,13,23 7	8,37,12 26	
CRl.7x3.5SxNi	Screw	7, 27	7, 8	
CRl.7x4SxNi	Screw	11	28	
CRl.7x6SxNi	Screw	3	7	
CRl.7x8SxNi	Screw	11	26	
CR2x4SxNi	Screw	5	20	
CR2x5SxNi	Screw	19	21	
CRsl.4xl.8SxBZn	Screw	17	14	
CR 1.4x2SxBCr	Screw (black)	1	5	
CR.1.4x2SxCr	Screw	1	5	
CRsl.4x2SxNi	Screw	13	32	
CRsl.4x3SxBZn	Screw	17,31	11, 6	
CRsl.7x2SxBZn	Screw	19	23	

Parts List (Screw)

Parts No.	Parts Name	Page	No.	Remarks
CRs1.7x2SxNi	Screw	13	46	
CRs1.7x2.5SxBZn	Screw	21	51	
CRs1.7x2.5SxNi	Screw	3,5,23	10,30,24	
CRs1.7x3SxNi	Screw	11,13, 27	13,45, 6	
CRs1.7x3.5SxCr	Screw	21	50	
CRs1.7x3.5SxNi	Screw	9	10	
CRs1.7x6SxNi	Screw	1	9	
CRs2x3SxNi	Screw	5	16	
U1.7x1.8SxNi	Screw	11	7	
U1.7x2SxNi	Screw	23	25	
T1.4x2.5SxBNi	Screw	21	40	
T1.7x2.2SxBZn	Screw	17	32	
V1.4x1.6SxNi	Screw	7	30	
V1.7x1.8SxNi	Set screw	11	8	

SKETCH	STEPS IN DISASSEMBLING
Fig.1 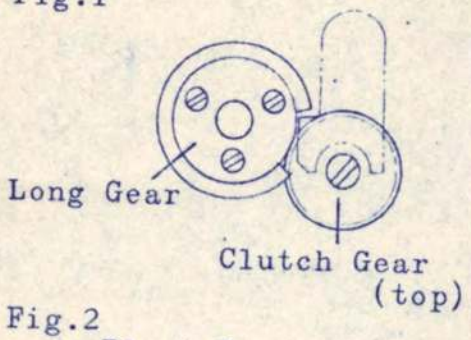 	2. Detach the long gear. (Fig.1) Lift up while shifting it to the left and right. 3. Detach the clutch gear (top).(Fig.1) 4. Detach the flash synchro ring.(Fig.2) Unscrew one fixing screw. 5. Detach the front curtain stopping ring. (Fig.3) Unscrew two fixing screws. 6. Disconnect the spring of the setting pawl. (Fig.2) Disconnect the side catching the setting pawl.
Fig.2 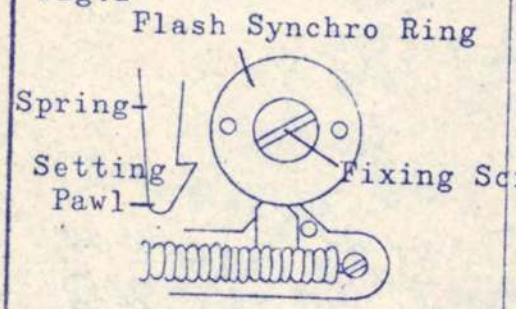 	
Fig.3 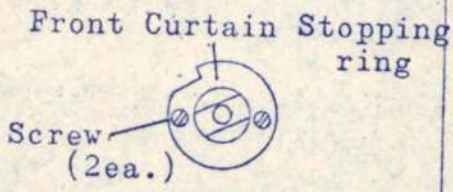 	7. Detach the shutter gear. (Fig.4) Unscrew one fixing screw. 8. Detach the first curtain ratchet and the second curtain ratchet. (Fig.5) Unscrew one fixing screw of the ratchet pawl. <u>CAUTION</u> Detach the first curtain and second curtain shafts by pressing down on them with a screwdriver and rotating counter-clockwise.
Fig.4 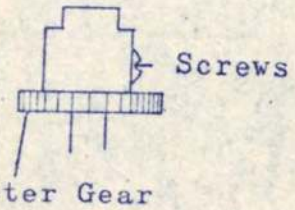 	
Fig.5 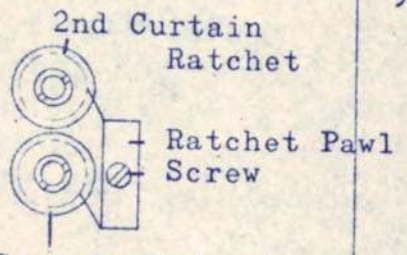 	9. Detach the shutter assembly base plate. (Fig.6) Unscrew three fixing screws.
Fig.6 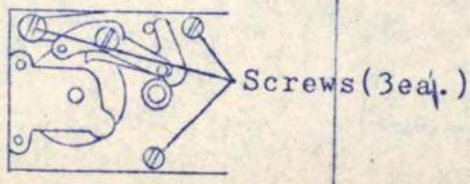 Shutter Assembly Base Plate	

Parts List (Washer)

Parts No.	Parts Name	Page	No.	Remarks
23W 13002B	Ring	17	6	
40W 26001S	Washer	13	48	
50W 21003B	Washer	17	28	
50W 36005B	Washer	17	27	
60W 18003B	Washer	13	34	
60W 19002B	Washer	17	16	
80W 45002B	Washer	7	18	
90W 62001B	Washer	7	21	
E-24	E.Ring	5	23	

SKETCH	STEPS IN DISASSEMBLING
Fig.1 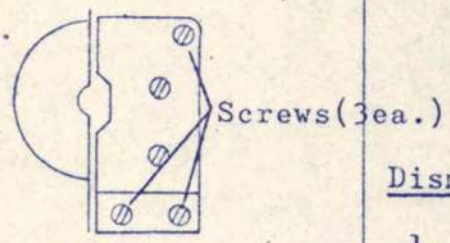 Shutter Spring Axle Holder	10. Detach the shutter spring axle holder. (Fig.1) Unscrew three fixing screws. <u>Dismantling the Crank Lever</u> 1. Detach the motor drive triangular plate. (Fig.4 of page 10) Unscrew two fixing screws. 2. Detach the coupling disc. (Fig.2) Unscrew one fixing screw. 3. Detach the crank lever. (Fig.2) Unscrew one fixing screw.
Fig.2 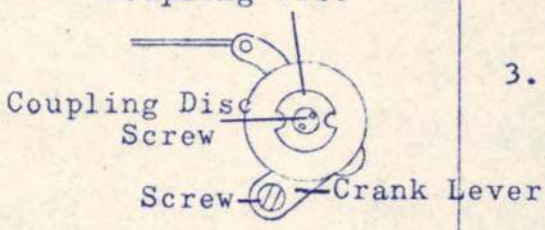 	
Fig.3 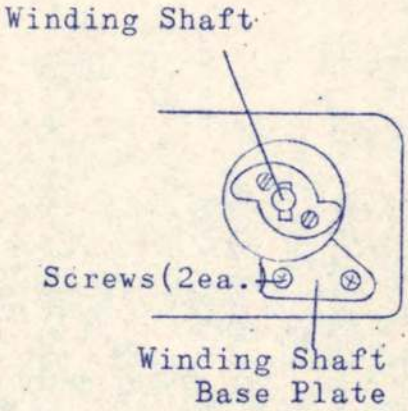 	<u>Dismantling the Winding Shaft</u> 1. Detach the winding shaft base plate. (Fig.3) Unscrew two fixing screws. 2. Detach the spool assembly. (Fig.4) Lift up the winding shaft and detach the spool assembly, by pulling out in the arrow-indicated direction.
Fig.4 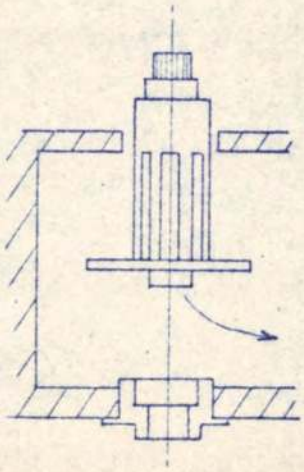 Spool Assembly	

SKETCH	KEY POINTS IN ASSEMBLING
Fig.1 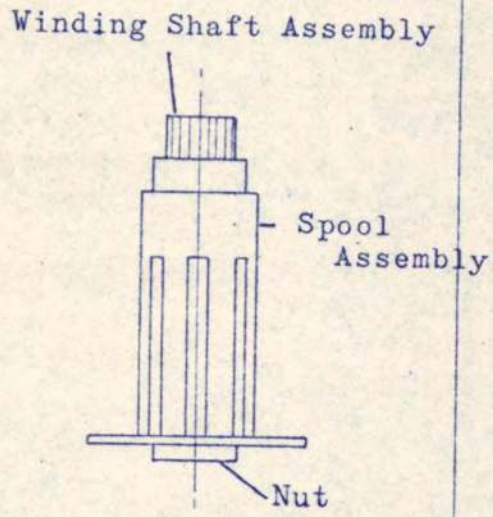 	<u>Dismantling the Spool Aeembly</u> 1. Detach the winding shaft assembly. (Fig.1) Hold the top end firmly and unscrew the nut at the bottom end. <u>CAUTION</u> Do not damage the gear. (Fig.1) 2. Take off the spool assembly. <u>CAUTION</u> Do not lose the washer and spring which are inserted between the winding shaft assembly and the spool assembly.
Fig.2 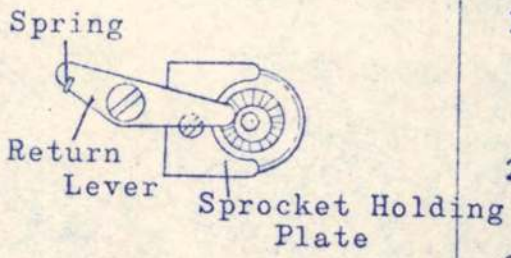 	<u>Dismantling the Sprocket</u> 1. Detach the return lever. (Fig.2) Unscrew its fixing screw and detach the spring. 2. Detach the sprocket holding plate. Unscrew one fixing screw. 3. Detach the sprocket. (Fig.3) Pull out the sprocket shaft. <u>CAUTION</u> Align with the slot in the body when pulling the sprocket shaft out.
Fig.3 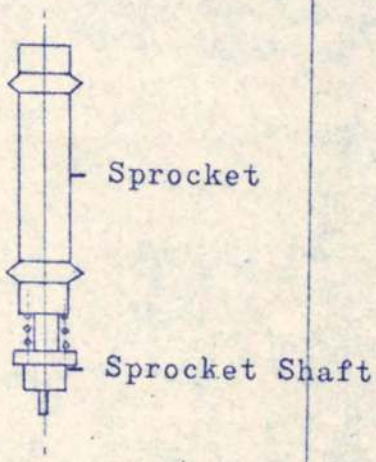 	

SKETCH	STEPS IN DISASSEMBLING
Fig.1. 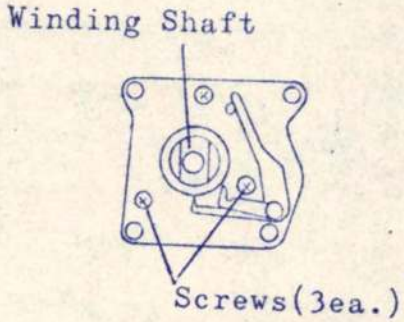 	<u>Detaching the Winding Shaft Assembly</u> 1. Detach the winding shaft. (Fig.1) Unscrew three fixing screws. Pull out the winding shaft after detaching the winding assembly plate (bottom).

SKETCH	STEPS IN DISASSEMBLING
Fig. 1 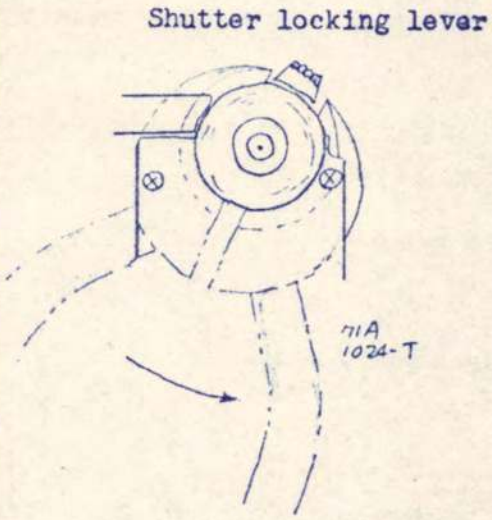 Fig. 2 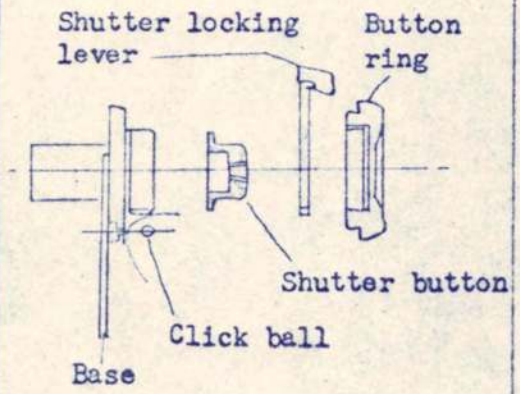 	<u>Dismantling the Shutter Locking Lever</u> Detach the shutter locking lever. (Fig.1) Unscrew the shutter ring with the special tooling wrench 71A 1024-T, by revolving in the counter-clockwise direction. <u>CAUTION</u> 1) A click ball for the shutter locking lever is inside the shutter button assembly, so care must be used not to lose it. (Fig.2) 2) Leave some space on both sides of the shutter locking lever, when clamping with the special tooling wrench, to prevent scratches on the finish of the lever. (Fig.2)

SKETCH

Fig.1

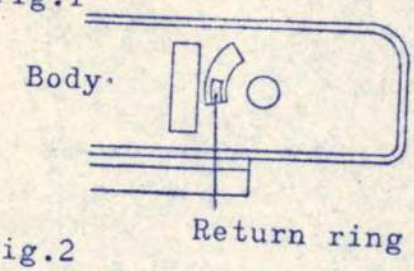

Fig.2

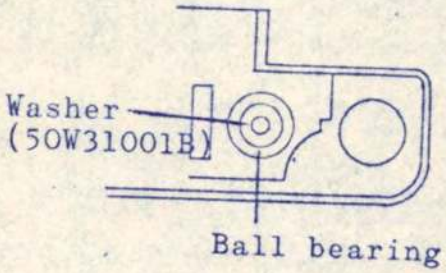

Fig.3

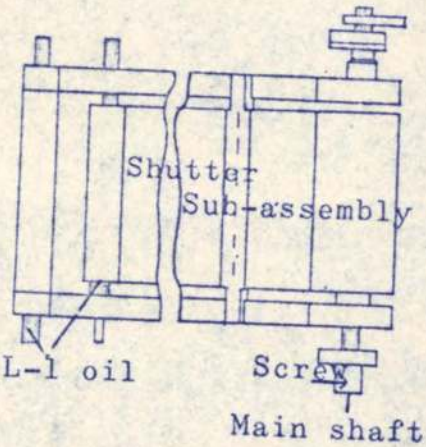

Fig.4

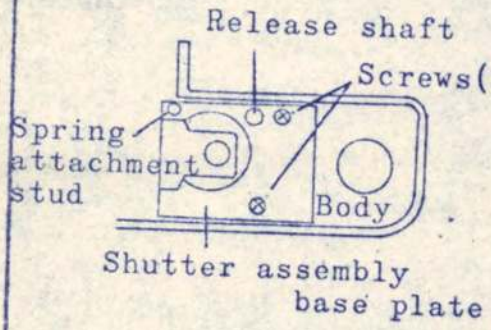

KEY POINTS IN ASSEMBLING

Assembling the Focal Plne Shutter

(The following has been written for the exchange of the focal plane shutter, too)

1. Apply a very small amount of TOKO L-1 oil to the friction surface of the return ring. (Fig.1)

   CAUTION

   Fluidity of the TOKO L-1 oil is very great and, therefore, only a very little should be used, especially because of the danger to other parts.
2. Insert the ball bearing and washer (50W 31001B) in the ball bearing base of the shutter's main shaft. (Fig.2) Insert from inside the body.
3. Detach the main shaft gear from the shutter sub-assembly. (Fig.3) Unscrew one fixing screw with a screwdrive.
4. Apply some TOKO L-1 oil to the friction surface of the shutter sub-assembly. (Fig.3) Apply a very little with a brush.
5. Attach the shutter sub-assembly to the body. (Fig.4) Wind the shutter curtains once completely around the drum and fit to the ball bearing base; then fix the shutter assembly baseplate, with two fixing screws, while checking the action of the release shaft.
6. Fix the spring attachment stud.
7. Attachment of the second curtain shaft. (Fig.5)

   Fit the brass metal plate to the shaft and place inside the body; insert the washer from the base side and screw in the ratchet wheel.

SKETCH	KEY POINTS IN ASSEMBLING
Fig.5 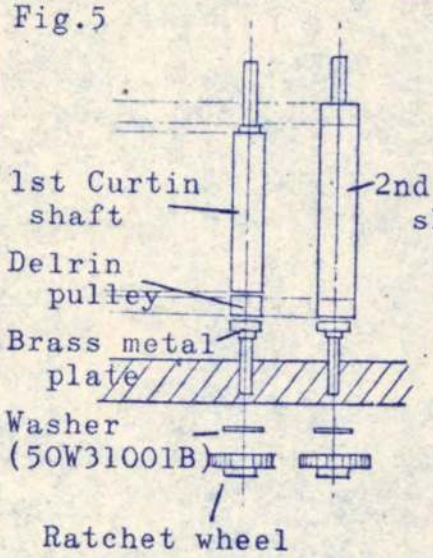	8. Attachment of the first curtain shaft. (Fig.5) Insert the Delrin pulley and brass metal plate on the shaft and place inside the body; insert the washer from the base side and screw in the ratchet wheel.
Fig.1 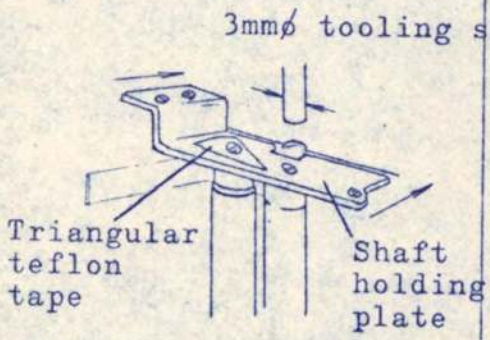	9. Attachment of the shaft holding plate. (Fig.1) First, fit the second curtain shaft to the shaft holding plate and insert a tooling shaft(3mm diameter) in the opening for the exposure meter shaft: then push the shaft holding plate in the arrow-indicated direction, while pressing down at the same time, and, fianlly, fix with three fixing screws. Then cover with a trianguarly cut piece of Teflon tape.
Fig.2 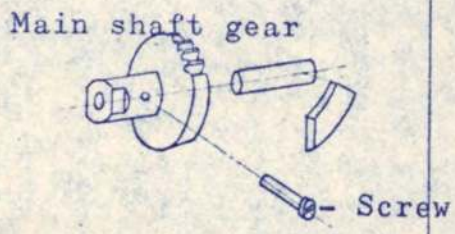	10. Attachment of the main shaft gear. (Fig.2) Attach the gear that was taken off in 3. Play in the axial direction(vertically) must be held to between 0.05 to 0.1mm. If play is too large, insert washers between the shutter assembly base-plate and the shutter's main shaft. Washers are available in 0.05mm and 0.1mm thickness.
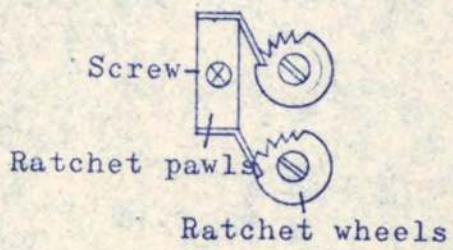	11. Attachment of the ratchet pawls. (Fig.3) After final tightening of the ratchet wheels (while pressing down from above), attach the ratchet pawls with one screw. Next, wind the ratchet wheels. (Eliminate curtain slack.) First Curtain...3-1/4 revolutions. Second Curtain...1 revolution

SKETCH	KEY POINTS IN ASSEMBLING
Fig.4 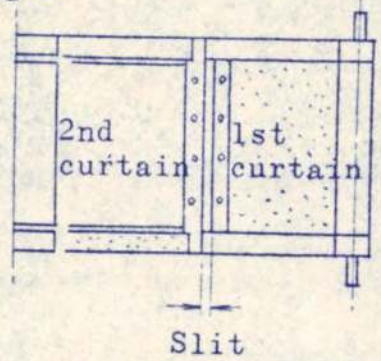	12. Checking slit and run of the curtains. (Fig.4) a) Slit: The Slit between the first and second curtains must be parallel or within 0.5mm in displacement. (Hold the second curtain and check while moving the first curtain.) b) Vertical displacement: Displacement vertically of the fisrt and second curtains must be within 1mm. (Fig.5) c) Run: Irregularities in the running of the curtains requires re-checking attachment of the main shaft gear in 10.
Fig.5 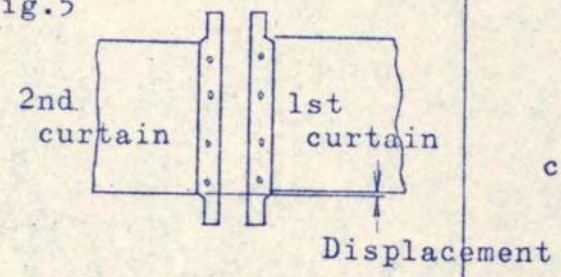	
Fig.1 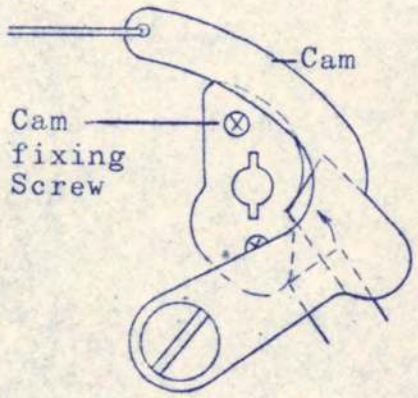	13. Catching of the crank lever.(Fig.1) The charging lever will catch slightly, as the winding lever is stroked, when it passes the vertex of the winding shaft cam and the crank lever should be pushed strongly so that it is agaist the base of the winding shaft cam (as indicated by the arrow) at this time.
Fig.2 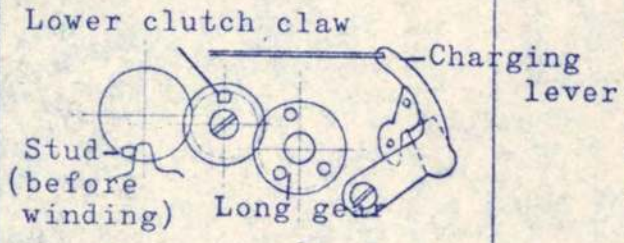	14. Assembling the lower clutch gear. (Fig.2) The attachment hole of the safety plate on the long gear must be higher by about 1 gear tooth on the right side when the crank lever catches on the winding shaft cam. Assemble the lower clutch gear so that its claw is topside in the above conditions. <u>NOTE:</u> The shutter's main shaft must not be wound at this time.

SKETCH	KEY POINTS IN ASSEMBLING
Fig.3 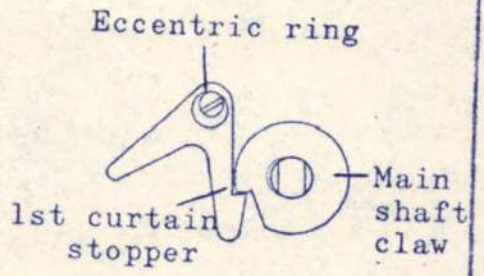 Fig.4 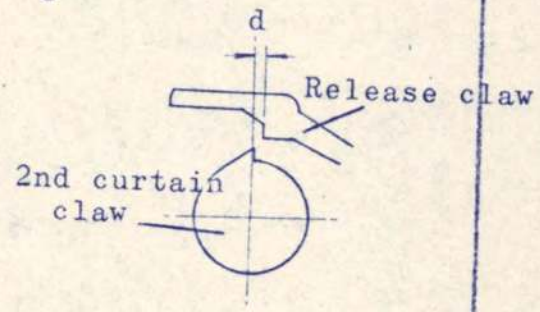 Fig.5 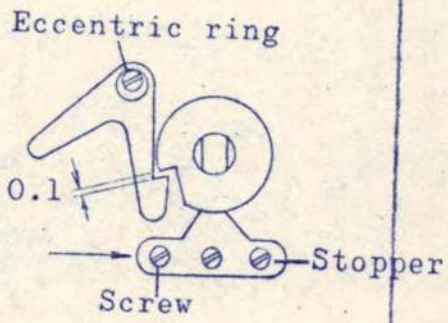 	15. Assembling the top clutch gear. Mesh as close as possible on the right side (crank lever side) of the lower clutch (gear) claw. 16. Space between release claw and second curtain claw. (Fig.3) (Fig.4) Space between the two, when the first curtain stopper catches on film winding, must be adjusted for the following:- d = 0.3mm Adjustment must be made with the eccentric ring of the first curtain stopper. Once proper spacing has been obtained, move the stopper to the right (as indicated by the arrow) and fix with the screws so that there is no clearance between the first curtain stopper and the main shaft claw. (Fig.5) Then the play of the first curtain stopper must be less than o.1mm when the winding lever is wound and the lever catches. <u>CAUTION</u> 1) When d, in Fig.4 on this page, becomes smaller, shutter speeds 1/1000 and 1/500 seconds will become faster. 2) On the other hand, if d becomes larger, then shutter speeds 1/1000 and 1/500 sec. will become slower.

SKETCH	KEY POINTS IN ASSEMBLING
Fig.6 Fig.1 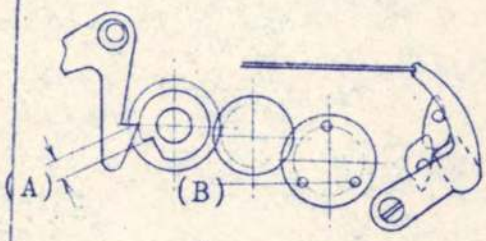 Fig.2 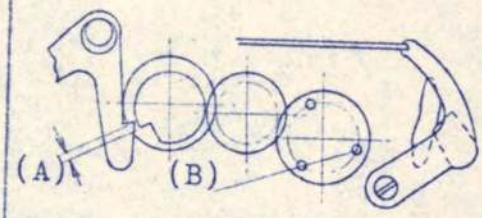 Fig.3 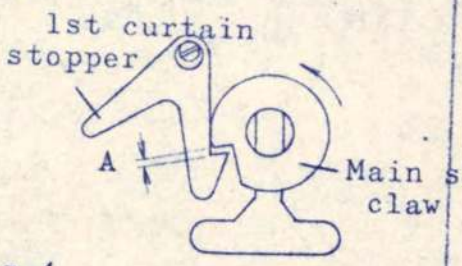 Fig.4 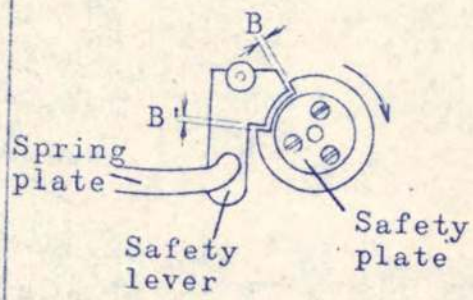 	17. Attachment of the bounce preventing lever. (Fig. 6) Fix with the fixing screw, after attaching the spring. 18. Relation between catching of the charging lever and the safety plate. If, upon catching of the charging lever, A) is shifted from its best position and B) is correctly positioned, as in Fig. 1, then adjustment must be made in the meshing of the top clutch gear, but if, A) is correctly located and the inclination of B) is large, as Fig.2, then adjustment must be made in the meshing of the long gear. 19. Attachment of the safely plate. Refer to Figs. 3 and 4. a) When there is no play at A), with catching of the first curtain stopper, there should be a slight play of the safety plate at B). b) When wound fully, there should be slight play of the safety plate at B'), when the play of the first curtain stopper at A) is 0.1mm. 1) When there is force in the winding direction - The conditions noted in a) and b) should both be filled. 2) When fully wound and the finger is released from the lever- *When safety plate does not return- The conditions noted in a) and b) must both be fulfilled. *When safety plate returns the amount of the backlash- The conditons noted in a) and b)

SKETCH	KEY POINTS IN ASSEMBLING
Fig.1 Reverse prevention claw 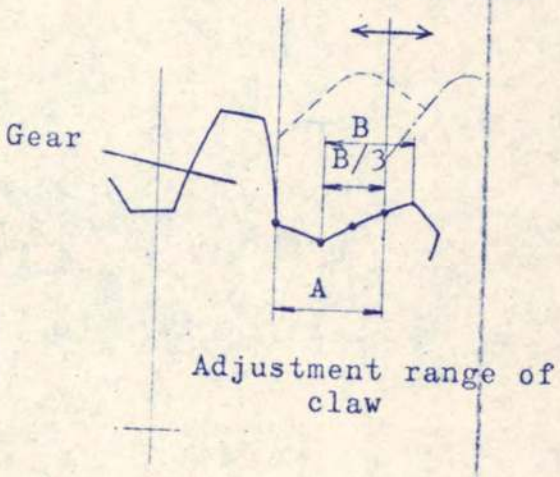 	must both be met, whether return action is strong or weak. 3) If force is applied to the sprocket with the fingers in the direction of the film tension, when fully wound, the play of the safety plate at B) sould be very little, say, 0.1mm. 4) Safety plate engagement with safety lever with abnormal operations. (Fig.1) Safety lever does not engage safety plate with strong or forced winding action while the shutter release button is being depressed. REASON: The front surface of the reverse prevention claw hits the face of the gear in the rotating direction and backlash does not take place. Eliminate by adjusting backlash. Backlash Asjustment: In Fig. 1, the tip of the reverse prevention claw must be within the range indicated by A), with normal winding action, or forced winding action, If the tip is outside this range, then loosen the fixing screw of the reverse prevention claw and adjust to the left or right (as indicated by the arrow in Fig. 1). 20. Attachment of the flash synchro ring Fix the front curtain stopping ring with two fixing screws. Then, attach the flash synchro ring with its fixing screw.

SKETCH	KEY POINTS IN ASSEMBLING
Fig.1 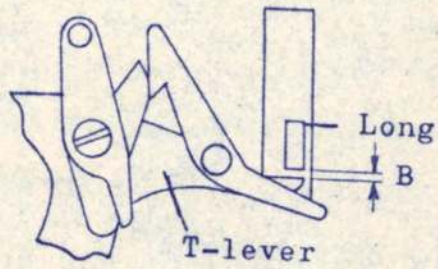 Fig.2 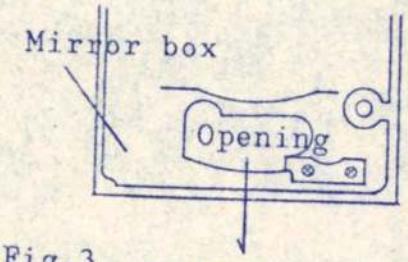 Fig.3 ←Clearance increase 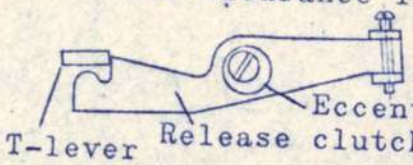 	<u>Clearance between the T-Lever and the Long Lever</u> B= 0.5mm when fully wound. (Fig.1) Adjust with the eccentric limiting plate of the release clutch lever, which can be seen in the oval-shaped opening on the lower part of the mirror box. (Fig.2) (Fig.3)

SKETCH

Fig.1

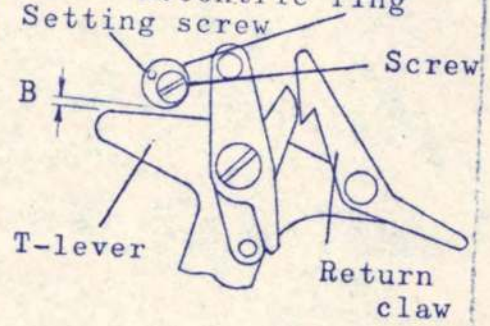

Fig.2

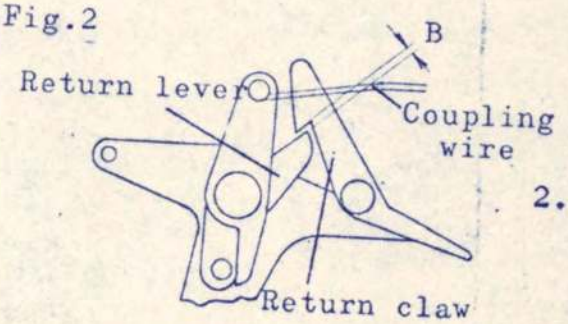

Fig.3

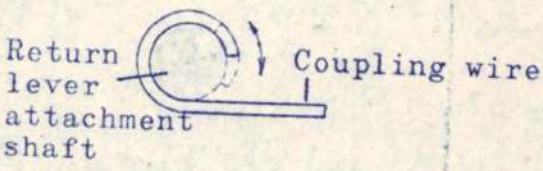

Fig.4

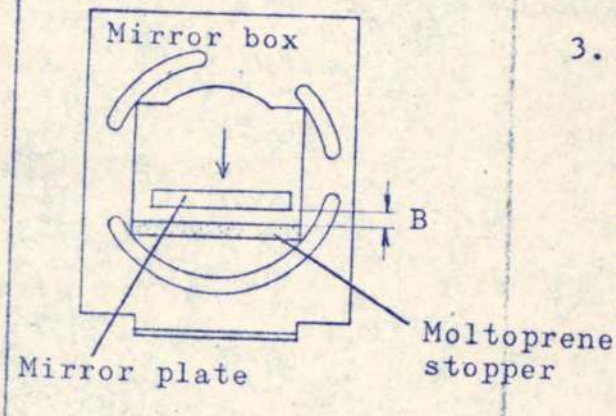

Fig.5

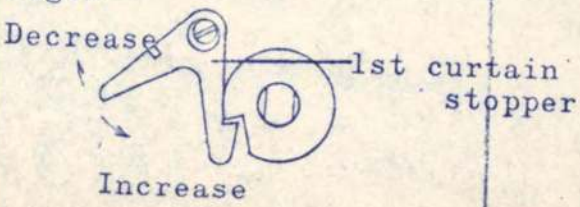

KEY POINTS IN ASSEMBLING

1. Clearance between the T-Lever and Eccentric Ring (B) (Fig. 1)

B = 0.2mm when fully wound.
Loosen the setting screw and fixing screw, then adjust the eccentric ring. After tightening the screws, apply lacquer to the screw heads.

CAUTION:

When B = 0, the mirror will stay up with winding action and will only swing down when the shutter is released.

2. Clearance between the Return Lever and the Return Claw (B) (Fig. 2)

Maximum clearance of B = 0.5mm is obtained with winding action.
Detach the coupling wire, on the return lever side, and adjust by winding the wire in or letting it out, on the attachment shaft.

CAUTION:

If there is too much clearance, the reflex mirror will not swing up sufficiently.

3. Relationship between Mirror Swing-Up and Shutter Release (B) (Fig. 4)

The shutter release position is B = 5mm.
Adjust by bending the first curtain stopper, as indicated.

SKETCH	KEY POINTS IN ASSEMBLING
Fig.1 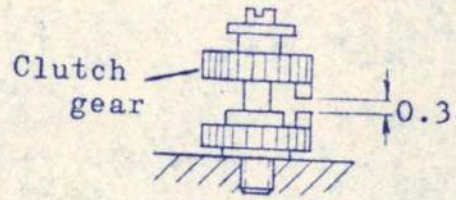 Fig.2 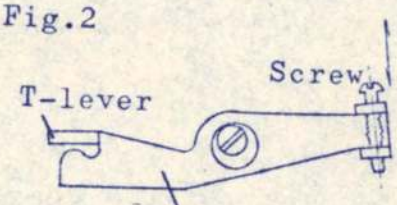 	1. <u>Relation between Release of Clutch Gear and Release of T-Lever</u> (Fig. 1) The T-Lever should be released after the clutch gear moves 0.3mm after release action. Adjust by moving the screw of the release clutch lever in the arrow-indicated directions. (Fig. 2) Apply EC 847 (3M) to the head of the screw.

SKETCH

Fig.1

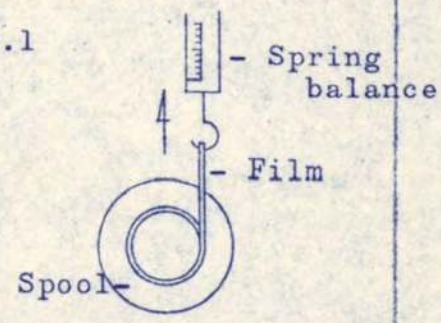

Fig.2

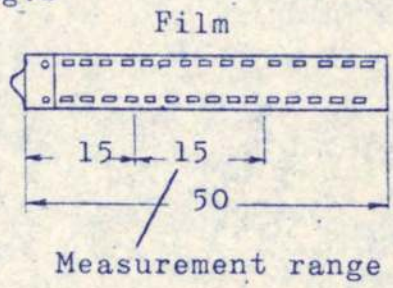

Fig.3

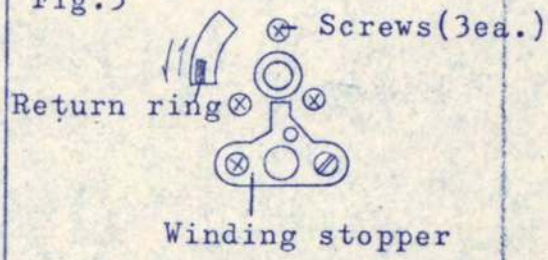

Fig.4

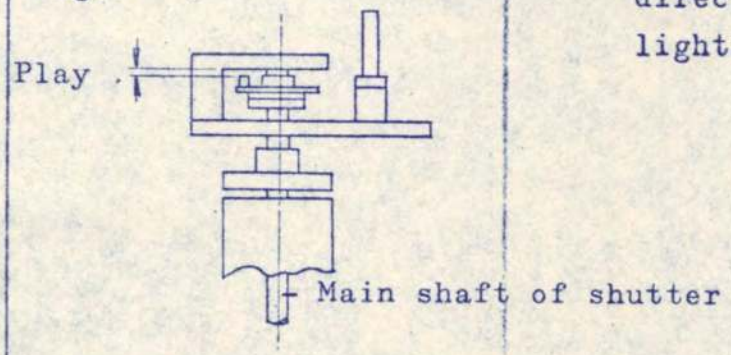

Fig.5

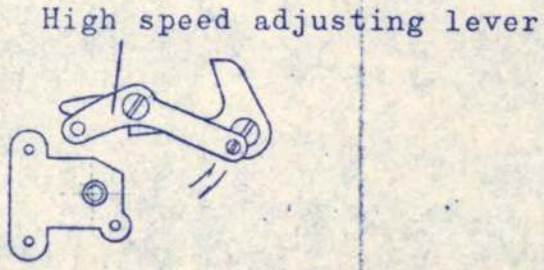

KEY POINTS IN ASSEMBLING

1. <u>Spool Assembly</u>

1) Revolution

Must revolve smoothly.

2) Friction

Sould be 150 to 280 grams. (Fig. 1)
Sould be measured with film having an overall length of 50 centimeters and measurement should take place between 15 to 30 centimeters from the start. (Fig. 2)

2. <u>Return Ring</u>

Must work lightly. (Fig. 3)
At the same time, the three fixing screws should be re-tightened.

3. <u>Play in the Axial Direction of the Shutter's Main Shaft</u> (Fig. 4)

Play must be held between 0.5 to 0.1mm.

4. <u>High Speed Adjusting Lever</u> (Fig. 5)

Must not touch the screw below it when moved in the arrow-indicated directions, while being pressed lightly from above.

SKETCH	KEY POINTS IN ASSEMBLING
Fig.1 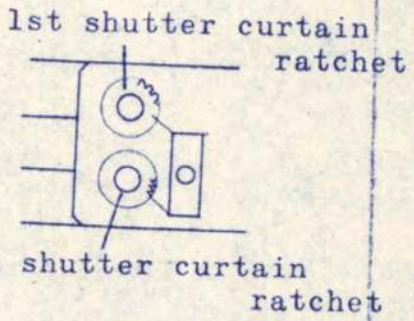 	1. <u>Shutter Adjustment</u> 1) Running time of the first shutter curtain must be 15 ±0.5m.s. (Fig. 1) <u>Adjustment:</u> Adjust with the first shutter curtain ratchet. 2) Irregularities in exposure time. (Fig. 1) <u>Adjustment:</u> Adjust with the second shutter curtain ratchet.
Fig.2 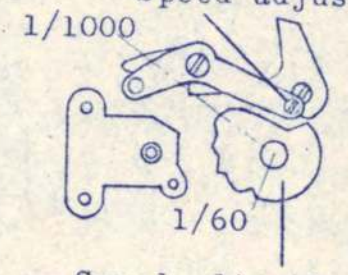 	3) Shutter speeds (Fig. 2) <u>Adjustment:</u> In order to speed up or slow down all shutter speeds from 1/60 to 1/1000 second, adjust the speed adjusting screw. In order to speed up or slow down specific shutter speeds, adjust the speed adjusting rotary cam. (Refer to Adjustment Standards on Page 61)
Fig.3 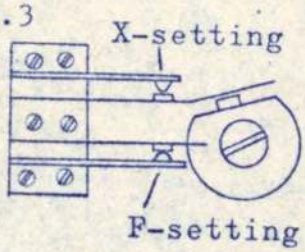 	4) F-Setting (Fig. 3) Time from switch-in until first shutter curtain begins its run should be 10 ±2 m.s. Adjust the clearance of the F-setting. 5) X-Setting (Fig. 3) Time after first shutter curtain completes its run until switch-in should be +0.7/-0.3 m.s. Adjust the clearance of the X-setting. <u>NOTE:</u> Electronic flash units should illuminate while the shutter is fully open at 1/60 second.

SKETCH	KEY POINTS IN ASSEMBLING

Fig.1

When dropping naturally, bend the edge

L-lever

Screw

Fig.2

Clearance should be under 2mm, but setting "B" 31mm

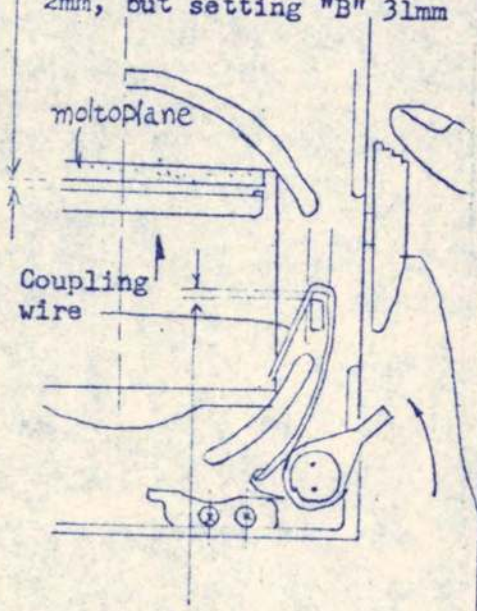

When depress the depth of field preview lever, clearance should be made

Depth of field preview lever

Mirror Lock-Up (Fig.1)

Attach the L-lever to the mirror box with its fixing screw.
Install spring onto the mirror lock-up shaft, and insert the mirror box.

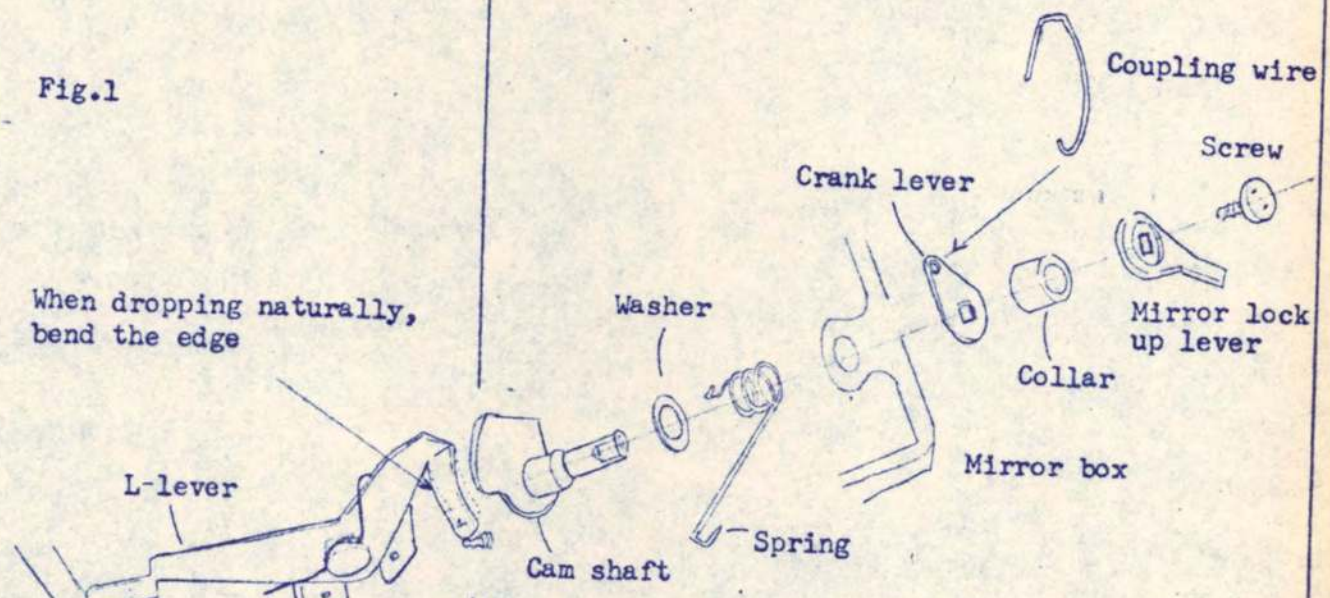

Then, position the crank lever and collar (after assembling, collar becomes a threaded nut; screw it onto the shaft with use of tool 72A 4089-T)

CAUTION

1) Since the mirror lock-up lever is detached when attaching the front cover, concern about scratching is not necessary when using tools for mirror lock-up lever and screw (56A 3053).
2) If the mirror lock-up shaft is loose, insert washer.

SKETCH	KEY POINTS IN ASSEMBLING

Fig.1

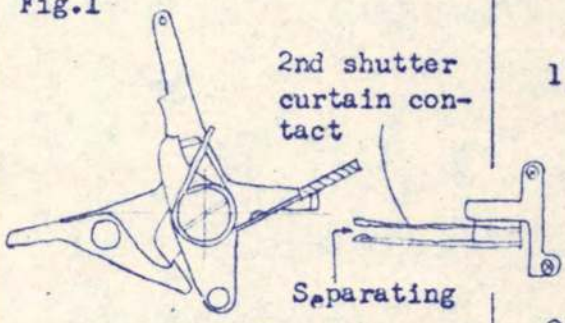

Fig.2

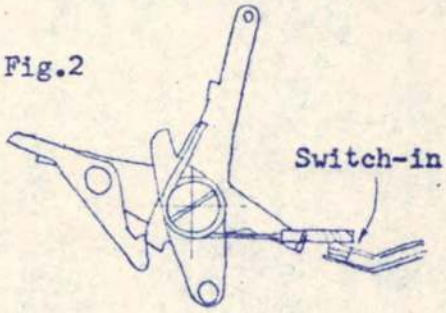

Fig.3

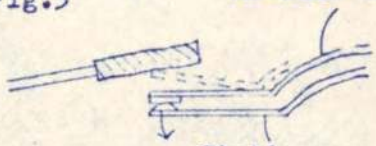

Fig.4

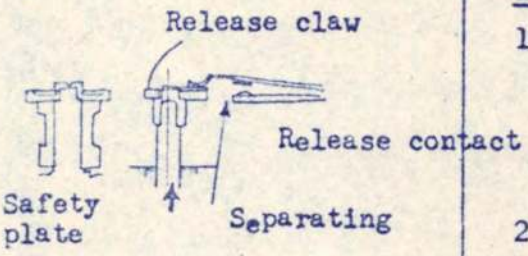

Fig.5

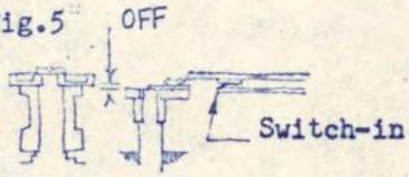

Tester

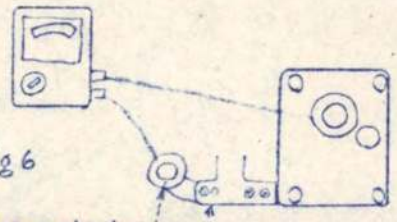

Fig 6

Position shall be determine that adjusting in hole of bottom cover.

Loc-tite screw

CHECK (Fig.1)

1) Install the coupling wire to depth field preview lever and crank lever and attach the bayonet mount. Operate the mirror lock-up lever and check for resistance.

2) With mirror locked up, check that lens is stopped down to f/11 at 1.8/58mm through f/8 at 1.4/58mm. (angle gauge 13° 52' 20'')

3) Press the shutter release button 40 times continuously when mirror is locked up, and observe that mirror does not fall naturally.

4) Mirror lock-up lever should operate smoothly without heavyness. 0.8 - 1.1 kg-cm

2nd Shutter Curtain Contact Adjustment

1. Lock the shutter speed at "B". Observe that 2nd shutter curtain contact is separated. (Fig.2)

2. At shutter speed of 1/1000, 2nd shutter curtain contact should be closed after shutter is released. (Fig.3)

To determine if switching is adequate, pull on the stationary contact and observe that the movable contact follows after it. (Fig.4)

CAUTION

After adjustment, at 1/1000 shutter speed confirm that safety contact separate when shutter is released.

SKETCH	KEY POINTS IN ASSEMBLING
Fig.1 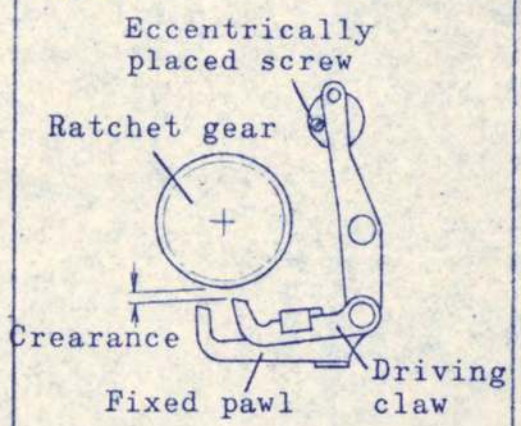 Fig.2 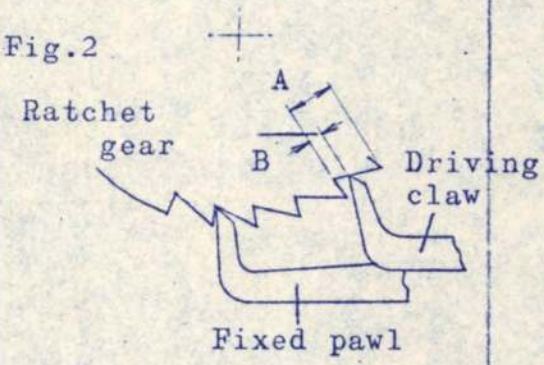 	<u>Exposure Counter</u> (Fig. 1) 1) Returning action There must be some clearance between the driving claw and exposure counter ratchet when the back cover is opened, with the eccentric gear in the position shown in Fig. 1. 2) Advancing action The driving claw should advance the exposure counter and the fixed pawl should engage each ratchet teeth, with eachcomplete action of the winding lever. * Relation of the driving claw and ratchet gear: (Fig. 2) B = A/2, before winding action. * Position of the eccentric screw (Fig. 1) Must be shifted to the left, before winding action.

SKETCH

Fig.1

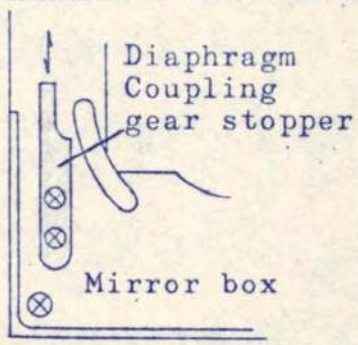

Fig.2

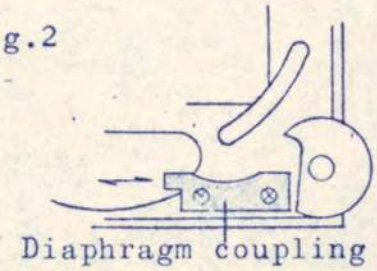

Fig.3

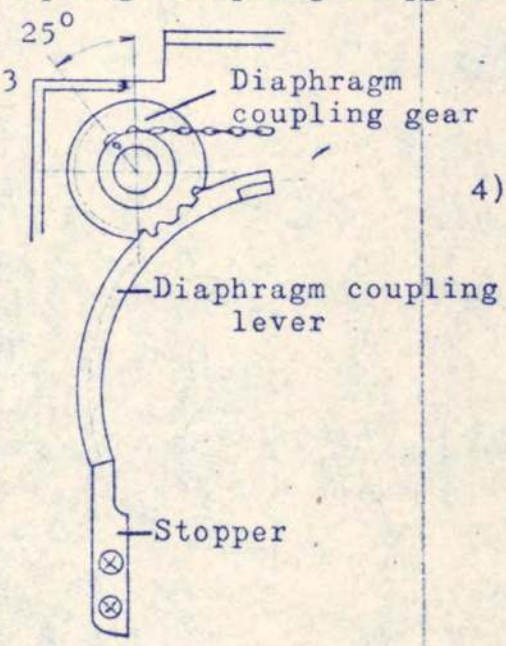

Fig.4

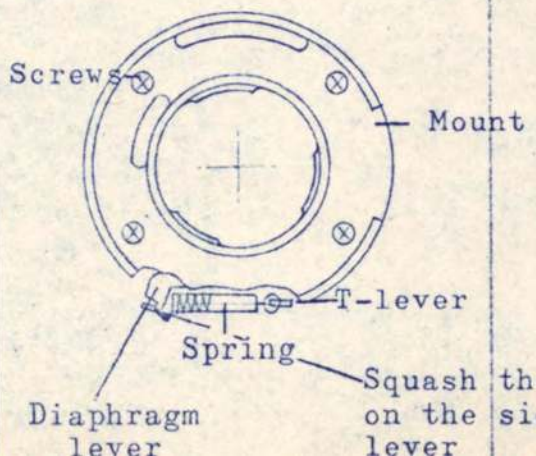

KEY POINTS IN ASSEMBLING

Mount

1) Position of the diaphragm coupling gear. (Fig. 1)
Adjust in the direction of the arrow-indication.

2) Adjustment for zero position of the diaphragm coupling gear. (Fig. 2)
Adjust in the arrow-indicated directions.

3) Relation of diaphragm coupling gear and diaphragm coupling lever.(Fig. 3)
Adjust meshing of the diaphragm coupling lever so that the beginning of the chain on the diaphragm coupling gear is at the 25° position, when the diaphragm coupling lever hits the stopper.

4) Attachment of mount. (Fig. 4)
Height (distance) from rail surface = 44.7 ±0.02mm.
(Use tooling gauges AC0101, AB0101 and AB0201.)

IMPORTANT

The Flange-focal distance of the lens is 44.76mm.
Attach the lens mount with four fixing screws, after confirming that the the spring is caught on both diaphragm lever and T-lever.

SKETCH	KEY POINTS IN ASSEMBLING
Fig.1 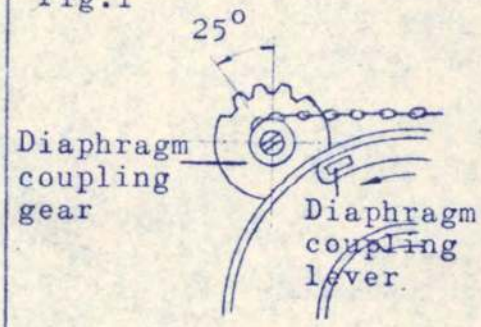 Fig.2 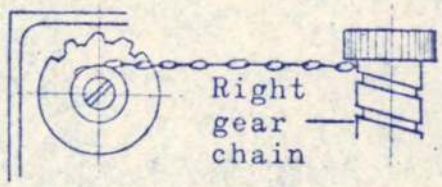 Fig.3 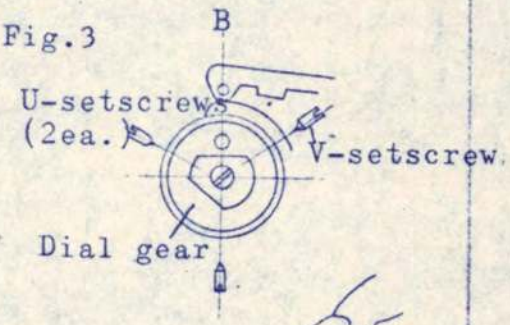 Fig.4 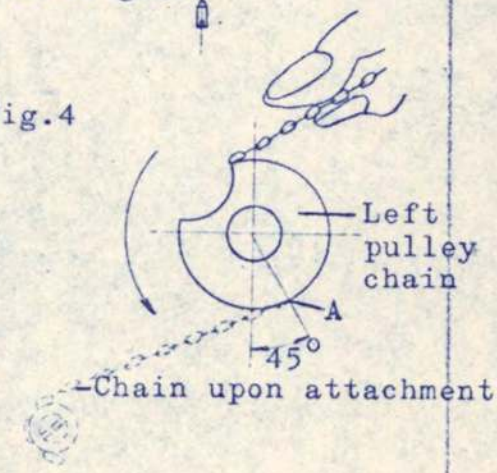 Fig.5 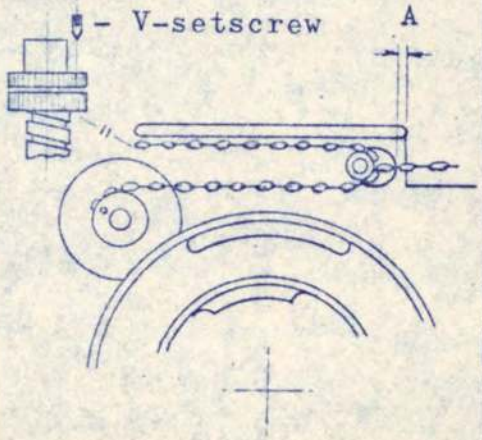 	<u>Chain</u> 1) Confirm whether the attachment point of the diaphragm coupling gear is at the 25° position, when the diaphragm coupling lever is moved in the arrow-indicated direction until it stops. (Refer to Fig. 3, page 29, lens mount adjustments.) (Fig. 1) 2) Insert the gear and chain assembly in the shutter dial axle, taking care to see that the chain is not twisted but straightened out on the diaphragm coupling gear and right gear.(Fig. 2) Insert the dial gear, with the click cam, at the position for "B". As illustrated, align the stud of the dial gear for "B" position and tighten the three setting screws securely. (Fig. 3) However, the dial gear must be set to coincide to the preciously drilled cavities for the setting screws. 3) Wind the left pulley chain in the clockwise direction fully, agaist spring tension and, from that point, return the pulley to point A, by more than one to two revolutions. (Fig. 4) (More than one revolution up to two revolutions is specified because the fully-wound positions differ according to the spring power.) 4) Connect the right gear chain and the left pulley chain, with the click cam in the condition for "B". (Fig. 5) (See that the chain is not twisted when connecting.)

SKETCH	KEY POINTS IN ASSEMBLING
Fig.6 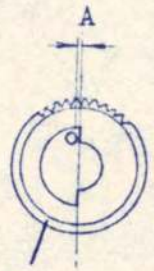	5) Wind the right gear chain so that A is 1mm, as illustrated. Fix the setting screw of the dial gear in this position. 6) When assembling the shutter speed dial, mesh with the gear at a point as near as possible to the stud of the dial gear. (Fig. 6) A, in this case, should be as small as possilbe.
Fig.1 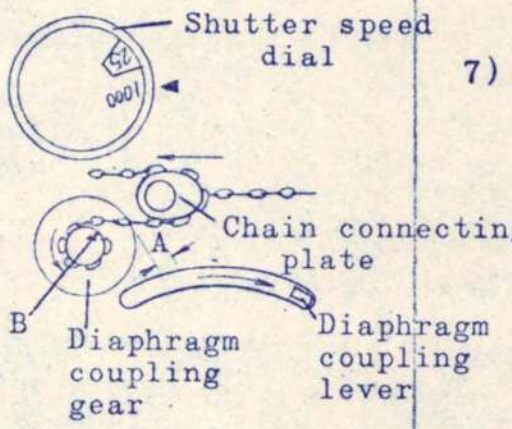	7) Cheking Method (Fig. 1) Set the ASA speed to 25 and the shutter speed dial to 1/1000; move the diaphragm coupling lever in the arrow-indicated direction as far as it will go, in which case - a) There should be some clearance at A, and b) There should also be some clearance at B.

SKETCH	KEY POINTS IN ASSEMBLING
Fig.1 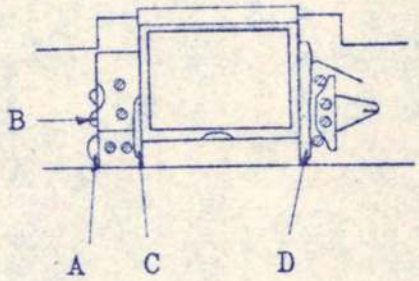 Fig.2 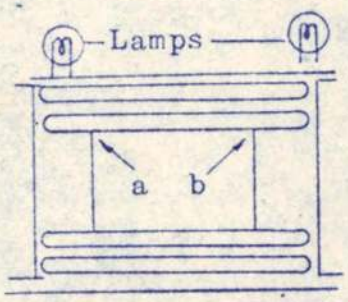 	<u>Moltoprene Strips for Prevention of Light Leakage</u> Moltoprene strips should be inserted at four places, or A, B, C, and D. (Fig. 1) <u>Checking Method</u> As in Fig. 2, there should be sufficient illumination with lamps and positions a and b should be checked. If the light cannot be seen when the shutter curtain is pressed slightly, it will be quite satisfactory.

SKETCH	KEY POINTS IN ASSEMBLING
Fig.1 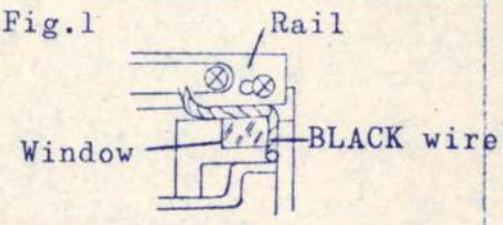	<u>Exposure Meter</u> 1) Cement the lead wires of the CdS and exposure meter to the body. (Fig. 1) Use Pliobond (Goodyear) and bend the lead wires so that they will not cover the meter window. 2) Solder the three lead wires of the CdS and the lead wires of the exposure meter. (Fig. 2) Take care that the solder is not splattered. 3) Screw in one fixing screw of the left rail, on the eyepiece side. (Fig. 3) 4) Turn the open side of the left pulley chain towards the center of the exposure meter attachment position, by rotating the shutter speed dial. (Fig. 4) 5) Assemble the exposure meter with its needle parallel to the rail (gear meshing position is not specially specified.) (Fig. 4)
Fig.2 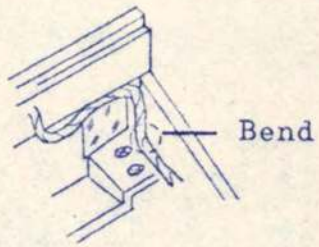	
Fig.2 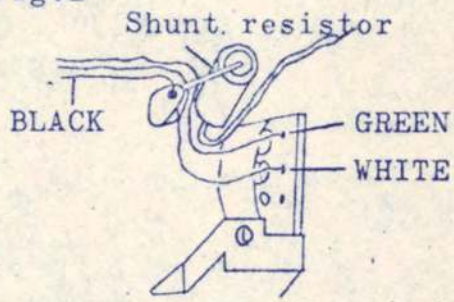	
Fig.3	
Fig.4 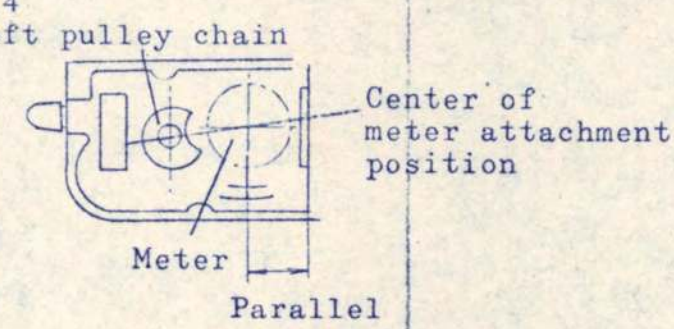	

SKETCH	KEY POINTS IN ASSEMBLING
Fig.1 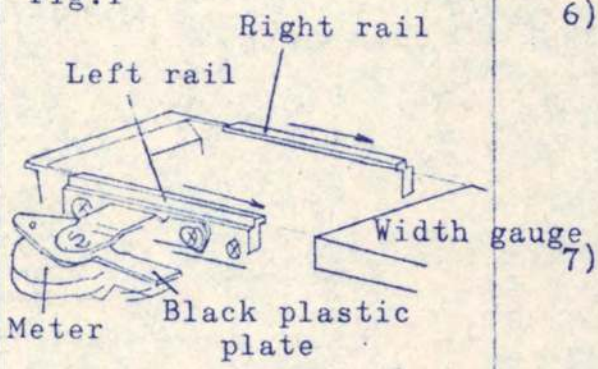	6) Insert the black plastic plate and screw in the second fixing screw of the left rail. (Fig. 1) Insert the width gauge and push both rails towards the eveypiece side. 7) The black plastic plate should completely cover the shaft of the meter needle, at ASA 100 and 1 second setting, with the meter switched OFF. (Fig. 2)
Fig.2 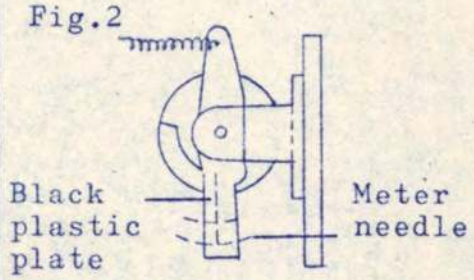	8) Place the shutter speed dial on B setting at ASA 1600 and place the meter needle on top of the left pulley gear (in preparation for attachment of the triangular prism) (Fig. 3)
Fig.3 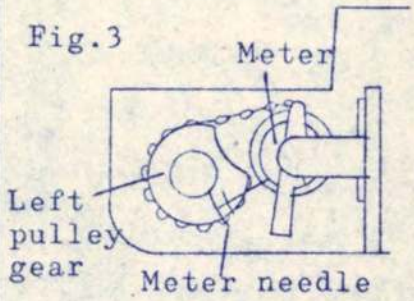	9) Insert the triagular prism without touching the exposure meter; coincide one edge of the prism to scribed line on the body and fix with two fixing screws. (Fig. 4) 10) Align the center of the index plate with the scribed line on the body and fix temporarily. (Fig. 5)
Fig.4 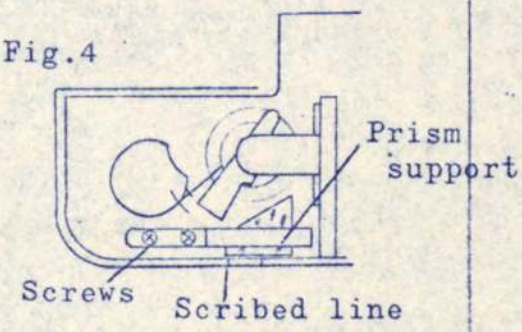	
Fig.5 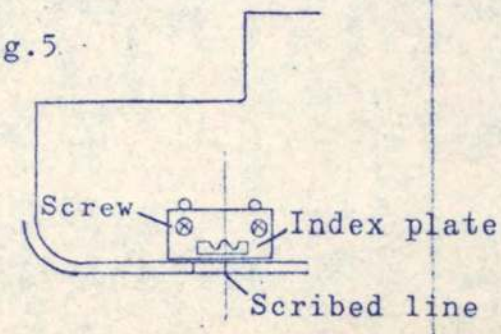	

SKETCH	KEY POINTS IN ASSEMBLING
Fig.1 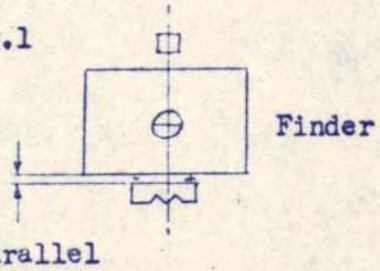	11) Attach the pentaprism finder (Fig.1) Adjust the position of the index plate so that it is parallel with the finder field and also properly centered below it/and or + and - (especially +) illumination is even at the edge of the frame; fix securely. (Fig.2)
Fig.2 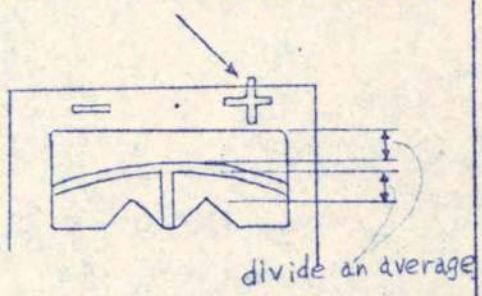	Slightly twist index plate to adjust so that meter needle is centered in the finder field. (Fig.2 & 3)
Fig.3 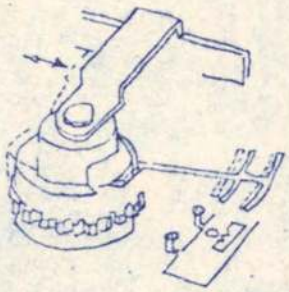	
Fig.4 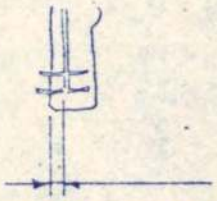	<u>Black plastic plate</u> 1) Position - Meter needle should be located at 1/3rd of the plate width. (Fig.4) 2) Action - Should return sufficiently with spring power.
Fig.5 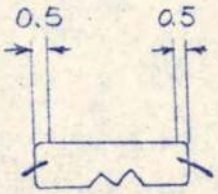	<u>Lingering of the Meter Needle</u> The meter needle should linger somewhat (0.5mm) when it hits the insulators on the left and right. (Fig.5)

SKETCH	KEY POINTS IN ASSEMBLING

Fig.1

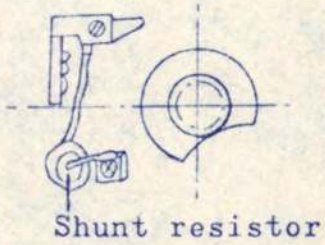

Fig.2

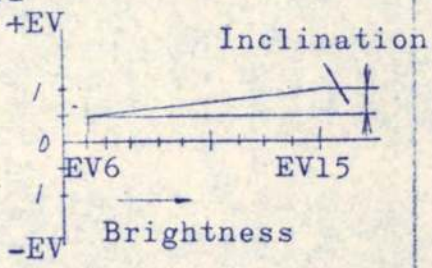

Fig.3

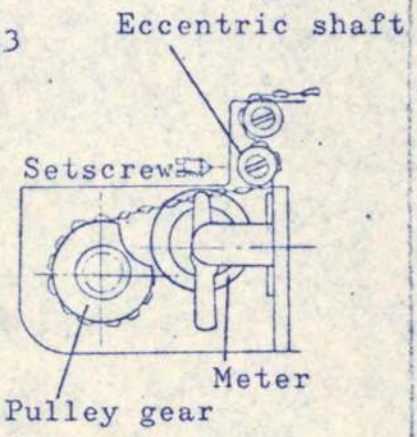

Exposure Meter Adjustments

1) Adjustment of error inclination. (Fig. 1)

Shunt off electricity by inserting the shunt resistor in the wiring circuite (Fig. 1) and equalize the errors for EV6 and EV15.
(Refer to the wiring circuite on Page 62.)
Error inclination, in this case, is understood as being the difference in the errors at EV6 and EV15, or error at EV15 minus error at EV6, as indicated in EV. (Fig. 2)
Shunt resistors (Rs) available are :- 4,5,6,7,8,9,10,(11),(12),(15) and (20) K Ohm,
but, for the purpose of making adjustments, those four types in brackets will be quite sufficient.
The Standard value is based on P = 63 (see table 2). (page 63)

2) Exposure meter revolution.

Revolve the exposure meter around its vertical axis and adjust uniformly from low to high sensitivity ranges, coinciding as much as possible with zero reading at EV11.

a) Coarse adjustments

Pull up the pulley gear and change the position in which the pulley gear meshes with the meter's gear.

NOTE:

Hold the exposure meter firmly, when pulling up the pulley gear, as it is always spring-tensioned to prevent backlash of the gear.

b) Fine adjustments (Fig. 3)

SKETCH	KEY POINTS IN ASSEMBLING
Fig.1 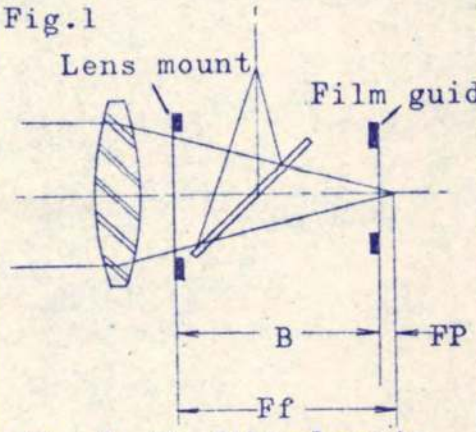 Ff---is the film plane to lens flange focal length.	Loosen the setting screw and revolve the eccentric shaft. 1. <u>Tolerance in Focusing Screen of the Finder</u> (Fig. 1) The tolerance should be +0/-0.04mm. <u>NOTE:</u> B ---- is the distance from film guide rail plane to the lens mount. FP---- is the distance from the film guide rail place to the film or the focal plane.
Fig.2 Washer 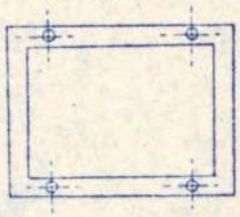	2. <u>Divergence in Centers of Field of View and Negative Frame</u> The divergence should be less than 0.3mm.
Fig.3 <u>Tooling lens</u> 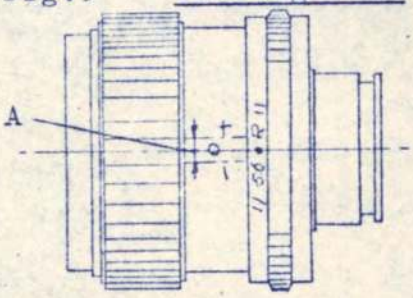	3. <u>Adjustment of Finder Focusing Plane</u> Adjustments should be made with the exclusive tooling lens, within the range of the scale (A = 0.7mm). (Fig. 3) a) Coarse adjustments(A = over 0.7mm) Adjustments should be made with washers, which are prepared in 0.1mm 0.15mm,0.2mm, 0.25mm, 0.3mm and 0.5 mm thickness. (Fig. 2) b) Fine Adjustments (A= less than 0.7mm) (Fig. 4)
Fig.4	Adjust by changing the angle of the reflex mirror. Loosen the eccentric ring fixing screw, after winding lever action, and adjust by revolving the eccentric ring to change the mirror angle. If there are any differences in the focusing plane, before and after film winding action, then check the

SKETCH	KEY POINTS IN ASEMBLING
Fig.1 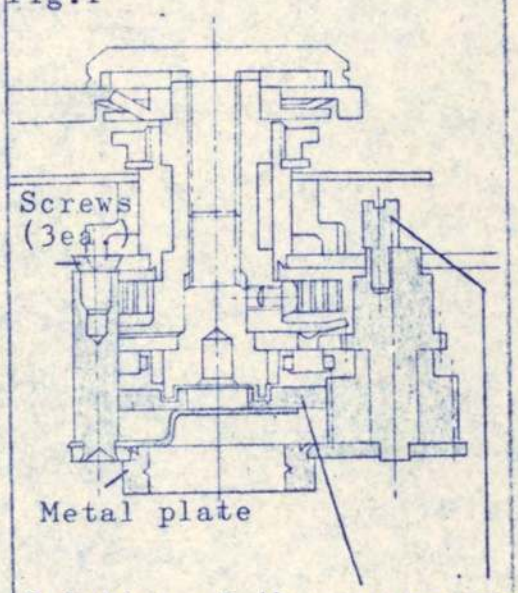 Relation of the square opening and the eccentric gear 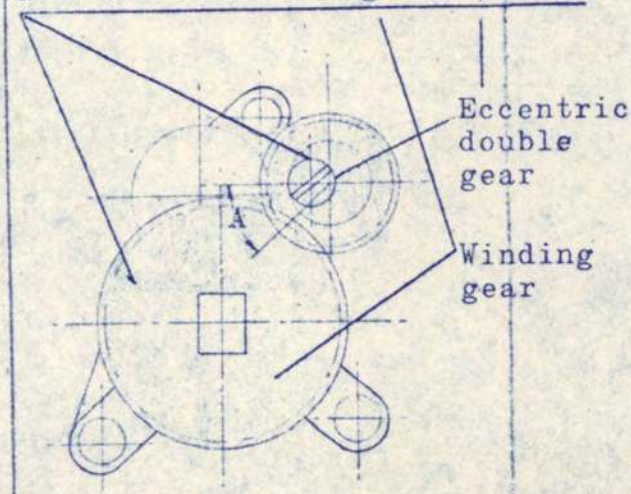	long lever, of the mirror box. (Refer to page 22) IMPORTANT: Differing from the RE Super 46A, there are no difference in focusing planes before and after winding action. Winding Assembly Plate 1) Assembly of the eccentric double gear. (Fig. 2) Point in the direction of A angle. Within the range of A = 45°. 2) Assembly of the winding gear. Assemble without changing the position of the eccentric double gear. (Fig.2) 3) Attachment of the bottom plate. (Fig.1) Fix with three screws.

SKETCH	KEY POINTS IN ASSEMBLING
Fig.1	**Shutter Release Lock Lever** (Fig.1) Install the shutter release button assembly to self timer base. Insert the pressure plate and spring at the same time.
	Insert click stop ball into shutter release button assembly and position the shutter lock-lever. Insert the spring, shutter release shaft, shutter release button and, finally, while pressing the shutter button, screw in the shutter button cover and fix firmly. Use the special tooling wrench 71A 1024-T for the purpose of screwing the shutter button cover in securely. When doing so, however, see that the tooling wrench does not touch the shutter lock lever. (Fig.2)
Fig.2	CHECKING PROCEDURES 1) The shutter lock lever must operate smoothly. 2) The shutter lock lever must click clearly. 3) Play of the shutter release button must be about 0.1 to 0.2mm. 4) Shutter release button must operate smoothly, when released quietly, and must not catch.

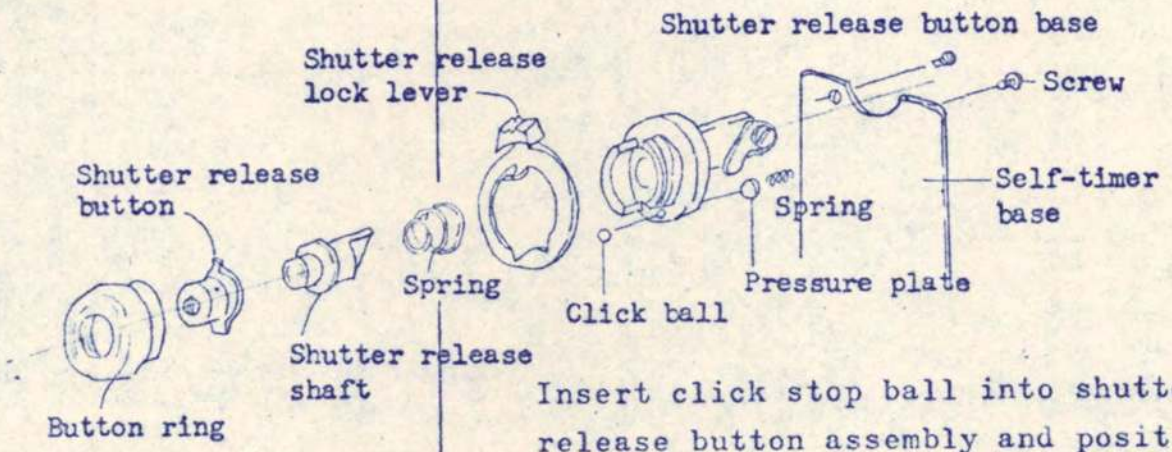

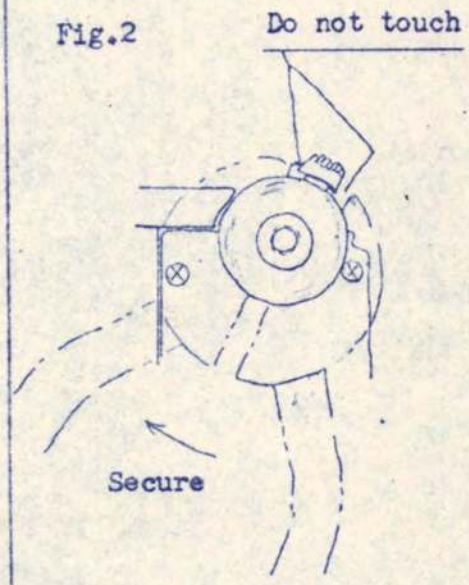

SKETCH	KEY POINTS IN ASSEMBLING

Fig.1

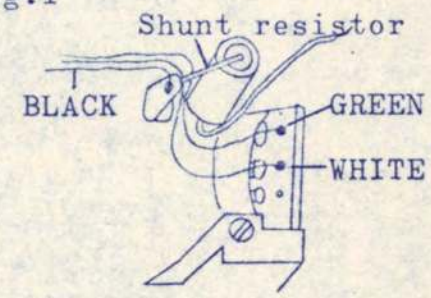

Fig.2

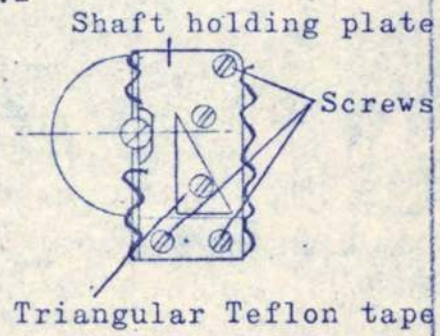

Fig.3

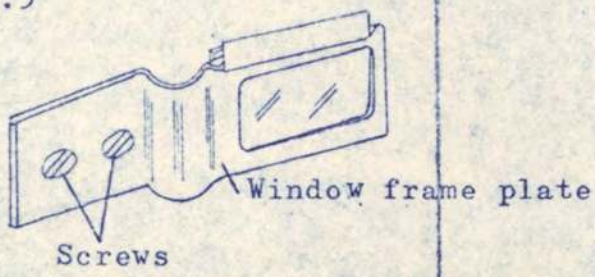

Exchange of the CdS Photo-Cell

This section covers exchange of the CdS photo-cell without disassembling the mirror box from the camera body. Disassemble the Super D, as per instructions on page 1 (front cover plate and left top cover plate), page 3 (exposure meter) and page 7 (triangular prism), before proceeding with the following.

1) Detach the lead wires of the CdS Photo-cell.

a) Disconnect one side of the shunt resistor.

b) Disconnect the black, green and white lead wires, by eliminating their solderings. (Fig. 1)

2) Detach the shaft holding plate. Unscrew three screws. (Fig. 2)

NOTE:

Moltoprene strips are attached on the edges indicated as ∿∿∿ and their detachment will be rather difficult.

3) Loosen the two screws of the window frame plate. (Fig.3)
(Loosen only and do not detach completely.)

NOTE:

Using a long nose screwdriver will be more convenient.

SKETCH	KEY POINTS IN ASSEMBLING
Fig.1 Fig.2 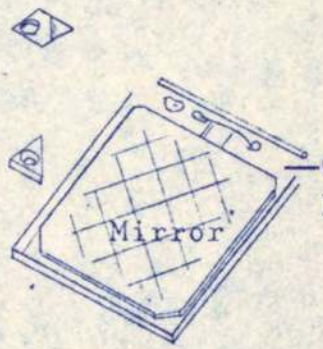 	4) Strip off the apron (Shutter Curtain). (Fig. 1) NOTE: 1) The apron will be stiff with binding agent. 2) Take off nicely because it must be used for assembling. 5) Unscrew the two mirror plate fixing screws. (Fig. 2) NOTE: Do not apply excessive pressure on the mirror plate when detaching the fixing screws, as there will be misalignment in the 45° attachment angle of the mirror plate. 6) Detach the mirror. (Fig. 2) 7) Detach the CdS photo-cell. (Fig. 2) Pull on the silicon tube(black) and lead wires of th CdS photo-cell layer.

SKETCH	KEY POINTS IN ASSEMBLING
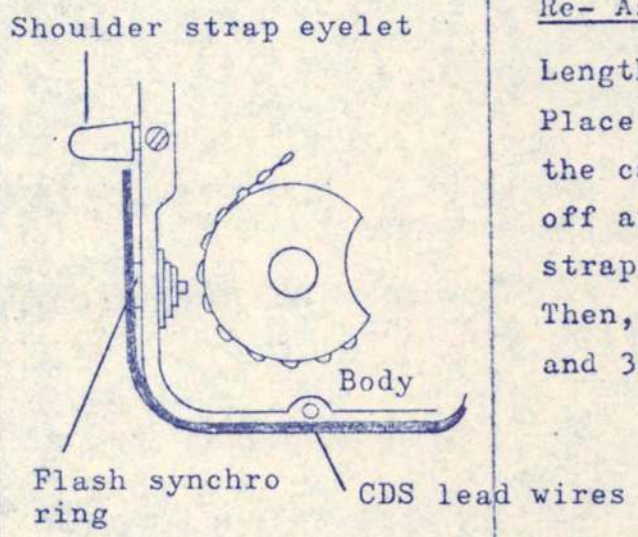	<u>Re- Assembling</u> Length of the CdS lead wire:- Place the lead wires agaist the edge of the camera body, as illustrated, and cut off at a position before the shoulder strap eyelet. Then, reassemble as per pages 33, 34, 35 and 36.

MAIN TROUBLES, THEIR ORIGINS AND REPAIRS THEREOF

1. Winding and Rewinding

1.1 Winding is impossible or very heavy

Reasons

a. Biting of the rewinding shaft.
b. Loosening of the rewinding shaft lead screws.
c. Breakage of the coupling wire.
d. Catching of the safety plate.
e. Return claw slips off or does not catch upon winding action.
f. Improper action of the clutch gear due to rust or dirt.
g. Foreign matter catching between the gears.
h. Biting of the shafts.
i. Shaft of the exposure counter eccentric gear is rusted.

Characteristics

In the case of a and b:-

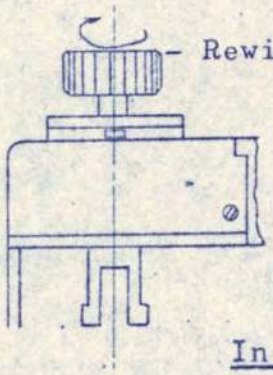

* In the case of a, there will be abnormal frictional resistance when the rewinding knob is rotated, without film loaded.
* In the case of b, the rewind knob will not come up or thescrewhead will cause abnormal resistance, during rewinding action of the film.

In the case of c:

* Winding will not be possible.

In the case of d:

* Winding will also not be possible.

In the case of e:

* Winding will be impossible.

In the case of f, g, h, and i:

* Action will be heavy(without film) with winding action. However, in the case of i, winding will not be smooth or will be impossible.

SKETCH	
Fig.1 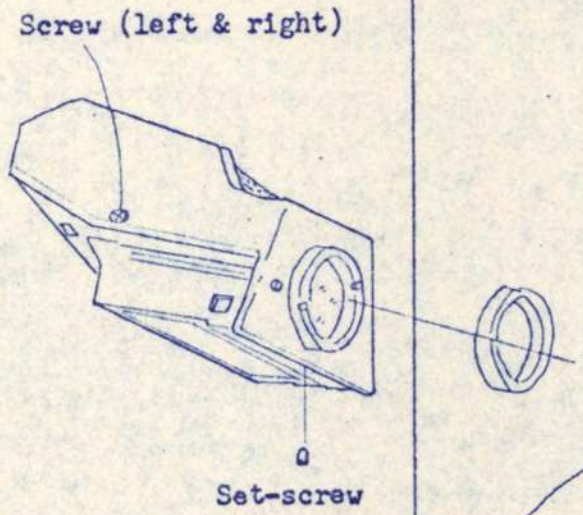 	<u>Detaching the Pentaprism Cover</u> (Fig.1) 1. Take out the set screw for fixing eyepiece lens assembly (72A 80030). (Fig.2) 2. Detach the eyepiece ring. 3. Take out the eyepiece lens assembly by using tool 32A 8003-T. 4. Unscrew two fixing screws CR1.4x2SxBCr (left and right). 5. Press the front portion of the penta prism cover as shown in Fig.2 ; while pulling guard portion, detach towards upward. Fig.2 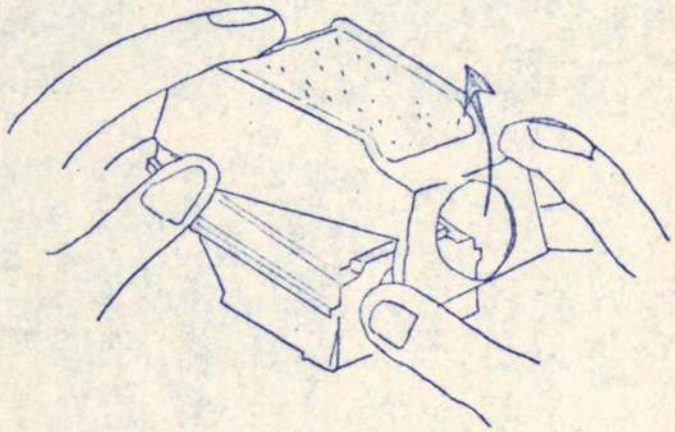

SKETCH	KEY POINTS IN ASSEMBLING
Fig.1 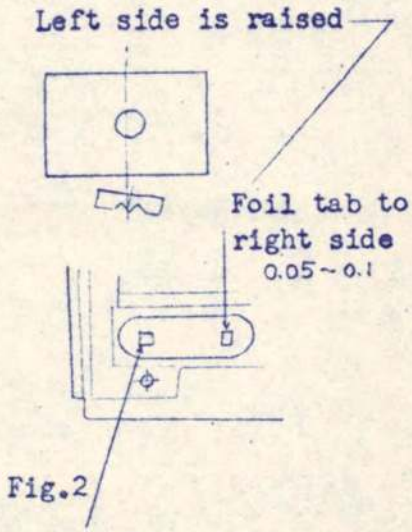 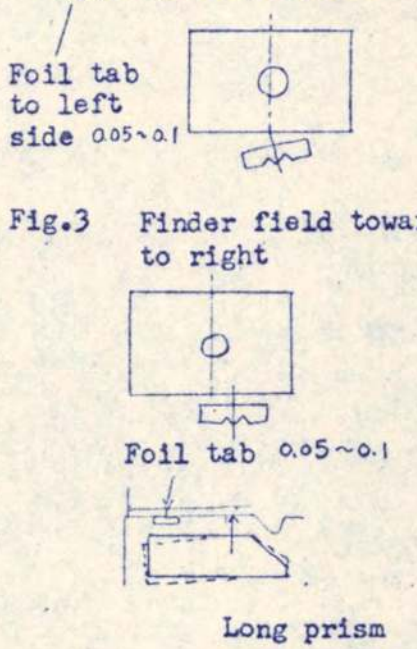 	<u>Exposure Meter Window Adjustment</u> 1. In case the exposure meter window is inclined relative to the finder field : (Fig.1) If left side is raised, secure foil tab to the right side of the long prism mount. (Fig.1) Foil should be a small cut of piece. (1.5 x 1.5) If right side is raised, attach a small cut piece of foil tab to the left side of the long prism mount. (Fig.2) 2. In case the finder field and window are not aligned : (Fig.3) If the winder inclines toward the right, affix foil tab at the point where it contact at the left. If inclined toward the left, secure foil tab at the right. <u>Diaphragm Window Adjustment</u> 1. When lens indication is toward the left or right of the field : (Fig.4) If the inscription is toward the left, slant the field frame toward the left and cement (small amount which does not protrude). If toward the right; With field frame reversed, slant toward the right. 2. When lens diaphragm indication is higher or lower than field : Move field frame up or down. (When raising up, trim field frame)

Release Contact Adjustment

1. Observe that release contacts separate when shutter release button is depressed. (Fig.4)

2. Gently return the shutter release button and observe that the switch closes after the release claw separate from the safety plate. (Fig.5)

CAUTION

Peform adjustment while confirming with tester. (Fig.6)

SKETCH	
Fig.1 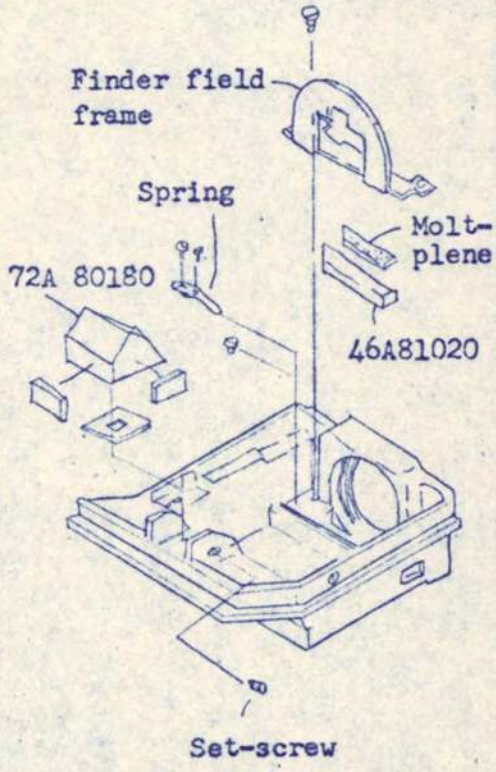	**Detaching the Finder Field Frame** Unscrew two fixing screws. (Fig.1) Detach the long prism assembly (46A 81020), since it will become free. **Detaching the Spring Plate** (Fig.1) Unscrew two fixing screw (3 places). Since the pressure dowel will become free, be careful to lose it. **Detaching the Prism Assembly** (Fig.1) Take out the set-screw. Detach the prism assembly and finder field frame. When doing, detach them quietly since these are attached with Loc-Tite. **CC (Control Center) Finder Adjustment** Since parallax occurs when observing be careful to place your eye on the optical axis.

Repairs

In the case of a and b:

1) Take off the front cover plate. (page 1)
2) Detach the left top cover plate.(page 1)
3) Disassemble the winding shaft.

* In the case of a, clean off the foreign matter, dirt, etc., and apply grease(Liqui-Moly Booster) to improve rotation.
* In the case of b, apply Loc-Tite(yellow) to the thread of the lead screw and screw in securely.

In the case of c,d,e,f,g, and h :

1) Detach the bottom cover plate. (page 1)

* In the case of c, change the coupling line.
* In the case of d, check the safety plate and re-adjust. (Refer to page 20)
* In the case of e, adjust the angle of the return claw or the opposing return lever so that there is no slippage with winding action.
* In the case of f, detach the clutch gear, clean off the rust or dirt, and apply a little oil to make operations more smooth.

  NOTE: Wipe with an oil cloth only so that oil cannot get into the ball bearings.
* In the case of g, check whether there is something caught between the gears and, if so, take it out.
* In the case of h, apply grease(Liqui-Moly Booster) to the biting shafts.(Do not apply too much grease)

In the case of g, h, and i:

1) Detach the front cover plate. (page 1)
2) Detach the right top cover plate. (page 2)
3) Detach the winding shaft assembly. (page 14)

* In the case of i, disassmble the shaft and apply grease(Liqui-Moly Booster).(Not too much)
* In the case of g, check whether there is anything caught between the gears.
* In the case of h, apply grease(Liqui-Moly Booster) to the shaft. (Do not apply too much grease)

1.2 Film cuts or rewinding action is very heavy.

Reasons

a. Revolution of the rewind shaft is heavy.

b. The return lever of the sprocket assembly does not move.

c. The back cover is not applying sufficient pressure to the film cartridge.

Characteristics

In the case of a:

Abnormal frictional resistance is very large or revolution is impossible when the rewind knob is rotated without film.

In the case of b:

Rewind button on camera base pops up immediately when depressed.

In the case of c:

Spring height is less than 8mm.

Repairs

In the case of a:

1) Detach the front cover plate. (page 1)
2) Detach the left top cover plate. (page 1)
3) Disassemble the rewinding shaft and repair as in the case of a and b on page 44.

In the case of b:

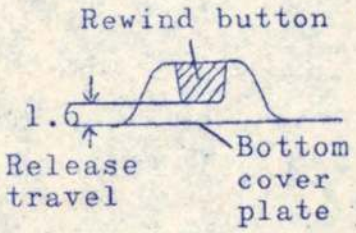

1) Detach the bottom cover plate. (page 1)
2) Check the return lever. (page 13)
   Adjust by bending the return lever so that the winding mechanism will be completely free (released) when the rewind button is depressed.

In the case of c:

1) Raise the cartridge pressure spring so that it is applying sufficient pressure to the cartridge.

1.3 Film is Scratched

Reasons

a. The pressure plate is not smooth.

b. The cartridge is at fault.

c. Scratches are made during development of the film.

Characteristics

In the case of a:

Compare the surface of the pressure plate agaist the developed negative.

In the case of b and c:

Scratches which cannot be judged as being produced by the pressure plate must be considered as being made by a defective cartridge or during film development.

Repairs

In the case of a:

1) Check the pressure plate.

If there are pointed ridges in the areas encircled by the dotted lines(see illustration) chances of scratches on the film are great and, therefore, the pressure plate should either be replaced or the points cleaned off and smoothened.

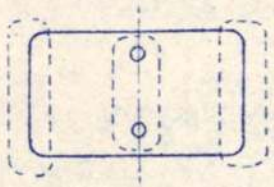

Pressure plate

1.4 Exposure Counter does not Advance or does not Return

Reasons

a. Improper actions of the driving claw and/or fixed pawl.
b. Movement of the exposure counter has slowed down because of oil flow on the winding assembly plate.
c. The fixed pawl is under the ratchet gear.
d. The driving claw slips off the ratchet when driving the exposure counter.
e. Return action is slowed down because of the returning spring being twisted inside the exposure counter assembly.
f. Action of returning spring is slow because of excess binding agent flow-out from between the exposure counter scale plate and the ratchet gear.
g. Improper relationship between claw and pawl.
h. Improper action of the seesaw lever.
i. Springs of the driving claw and/or fixed pawl detached.

Repairs

In the case of a:

Bend the spring so that it works properly.
Check by changing the position of the eccentric gear.

In the case of b:

Wipe the winding assembly plate and inside surface of the ratchet gear with benzine or alcohol.

In the case of c:

Bend the tip of the fixed pawl slightly so that it cannot get under the ratchet gear.

In the case of d:

Bend the tip of the driving claw slightly so that it cannot slip the ratchet gear.

In the case of e:

Lengthen the spring slightly by pulling it vertically and re-attach.

In the case of f:

Wipe off the excess binding agent with solvent

In the case of g:

Refer to Assembly of the Exposure Counter on page 28.

In the case of h:

Adjust with washers (under the eccentric ring).

In the case of i:

Bend the springs so that they will not become detached.

2. Shutter Mechanism

2.1 The shutter release button cannot be depressed.

Reasons

a. The clutch gear is rusted and cannot move (See page 23 Fig. 1)

b. Catching of the safety plate.(See page 20 Fig.3)

c. Incorrect positioning of the shutter release button.

d. Detachment of screws, etc.

e. Faulty shutter lock mechanism.

Repairs

In the case of a and b:

Same adjustment as those made for a and f of section 1.1.

In the case of c:

Detach the shutter release button and re-assemble correctly.

In the case of d:

Take the self-timer assembly apart and check inside the body for loose screws, etc.

In the case of e:

Repair by bending the protrusion of the shutter lock lever.

Lock-lever

2.2 Shutter curtains run across but do not open (at 1/1000 and 1/500 sec.)

Reasons

a. Wrong clearance between release claw and second curtain claw. (See page 19 Fig. 4)

b. Poor catching action of the first curtain stopper. (See page 19 Fig. 5)

c. Either first curtain is extremely slow or second curtain is extremely fast.

d. Release of clutch gear is slow.(See page 24 Fig. 1)

Repairs

In the case of a and b:

1) Take the base plate apart and adjust the eccentric ring so that the first curtain stopper will catch when the winding lever is advanced. (See page 19 Fig.3)

2) If the adjustment noted in the preceding 1) does not repair the trouble, then it is understood that clearance between the release claw and second curtain claw is not correct.
Therefore, take the right top cover plate off and re-adjust the clearance between the release claw and second curtain claw.
(See page 19 Fig. 4 and 16) Space between release claw and second curtain claw.

In the case of c:

1) Take off the base plate. (page 1)
2) Reverse the second curtain ratchet about 1/2 revolution so that the shutter will open on 1/500 second.
3) Adjust the running time of the first curtain. Use the shutter tester and set to 15 $\pm$0.5 m.s.
4) Wind the second curtain ratchet in until exposure time is uniform.

NOTE:

Adjusting the running time of the first curtain will result in changing the time-lag of the shutter which must also be checked.

In the case of d:

1) Take the base plate apart. (page 1)
2) Take the front cover plate apart. (page 1)
3) Adjust release of clutch gear and T-lever, through the adjustment opening of the mirror box. (page 24)

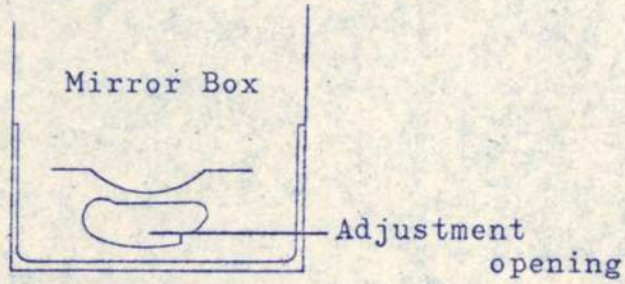

2.3 Non-Uniformity of shutter speeds (at 1/1000 and 1/500 sec.)

Reasons

a. Imbalance of spring tensions.

Repairs

If closing action of the shutter is faster than the opening action, then wind in the second curtain ratchet.

However, the speed of the first curtain must be checked to see whether it is 15 $\pm$0.5 m.s.

2.4. Fast shutter speeds (1/1000 & 1/500 sec.) are too fast or too slow

Repairs

1) Take the right top cover plate apart. (page 2)
2) Re-adjust. (See 3) Shutter Speeds, on page 26.)

2.5 Slow shutter speeds (1/30 to 1 sec.) are too slow or too fast.

Repair

1) Take the right top cover plate apart.
2) Adjust the slow shutter speed adjusting lever.

2.6 Specific shutter speeds are too slow or too fast.

Repairs

1) Take the right top cover plate apart. (page 2)
2) Disassemble the shutter speed cam assembly. (page 5)
3) Adjust by hammering out or filing down the high speed cam or low speed cam.

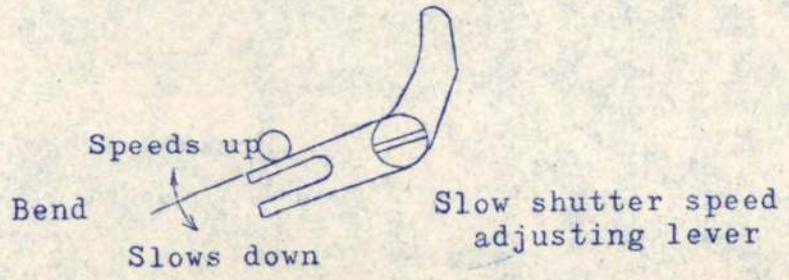

2.7 Faulty Contact or Short-Circuiting of Flash Synchronization

Reasons

a. Detached soldering.

b. Short-circuiting.

c. Faulty contact.

Repairs

Check point by point, from the central section of the synchrosettings, with a tester, following the flash circuit wiring diagram. (See page 60)

2.8 Incorrect Time-Lag of the Synchro-Settings.

Repairs

1) Take off the base plate.(page 1)

2) Bend the contact plate and re-adjust. (See page 26 Fig.3)

2.9 Electronic Flash does not illuminate although there is no faulty contact or short-circuite in the flash synchronization system.

Reason

a. Insulation resistance is weak (at the attachment points of the safety contact and X-setting.) Standard is 20 M Ohm and higher at 500V.

Repair

1) Take off the base plate. (page 1)

2) Dip a brush into ether or alcohol and clean the the attachment points of the safety contact and X-setting; dry with the heat of the soldering iron.

2.10 Faulty Self-Timer action.

Reason

a. Rust or dirt.

Repair

1) Disassemble the self-timer.(page 9)

2) Wash with gasoline.

3) Apply a very small amount of watch oil to the revolving shaft.

4) Exchange in the case of rust, etc, which cannot be eliminated.

2.11 Defective Shutter Curtain

Repairs

1) Take the front cover plate off. (page 1)
2) Take the base plate off. (page 1)
3) Take the left top cover plate off. (page 1)
4) Take the right top cover plate off. (page 2)
5) Disassemble the exposure meter. (page 3)
6) Diaseemble the shutter speed cam assembly. (page 5)
7) Disassemble the slow shutter speed assembly.(page7)
8) Disassemble the triangular prism. (page 7)
9) Disassemble the mirror box. (page 7)
10) Dismantle the tripod socket plate. (page 9)
11) Disassemble the shutter assembly. (page 10)
12) Strip either the first or second curtain, in the first place.
13) Clean the binding surface oil and/or dirt, by wiping it clean.
14) Replace with a new shutter curtain.

NOTE:

The amount of overlap of the first and second curtains should be 3mm or the width of the frame.

2.12 Shutter does not close on B(bulb)

Reason

a. Insufficient stroke of the safety lever. (See page 20 Fig. 4)

Repairs

1) Take the base plate off. (page 1)
2) Wipe the clutch gear and shaft and apply a very small amount of oil; then , bend the spring plate to make it slightly stronger.

3. Quick-Return Mechanism of the Reflex Mirror

3.1 Mirror rises with film winding lever action.

Reasons

a. T-lever returning spring is weak.(71A 3013)

b. Displacement of the T-lever limiting eccentric ring

c. Release clutch lever is displaced.

d. Rotary action of the aperture ring is heavy.

Repairs

In the case of a:

Bend the tip slightly to strength the action.

In the case of b:

Re-adjust. (See page Fig. 1)

In the case of c:

Re-adjust. (See page 22 Figs. 1, 2, and 3.)

In the case of d:

Improve action of the diaphragm lever (but do not bend).

3.2 Shutter is not activated although mirror swings up, when the shutter release button is softly depressed.

Reason

In correct interval between release of clutch gear and release of T-lever.

Repair

1) Detach the front cover plate and bottom cover plate. (page 1)

2) Re-adjust. (See page 24 Fig. 1)

3.3 Mirror stops midway during swing-up when the shutter release button is depressed.

Reason

Incorrect catching position of the crank lever.

Repair

Re-adjust. (See page 19 Fig. 2)

4. Finder

4.1 Incorrect Focus of the Finder.

Repair

1) Re-adjust. (See 3 Adjustment of Finder Focusing plate, on page 37)
Coarse adjustment should be made with washers.
Fine adjustments should be made by adjusting the mirror angle.

4.2 Focus error before and after Film Winding Action.

Reason

a. No clearance between long lever and T-lever.

Repair

1) Re-adjust. (page 22)

4.3 Non-uniformity of focus over the finder field.

Reason

a. Incorrect angle of the mirror.

Repair

1) Adjust correctly to 45°, by auto-collimation.
2) Or, view the Flat Test Chart through the finder and adjust the mirror angle so that focusing error is eliminated.

4.4 Focus shift when the diaphragm lever is activated.

Reason

The T-lever returning spring (71A 3013) is weak.

Repair

Bend the tip slightly to make the action stronger.

5. Exposure Meter

Since it is extremely difficult to correctly determine the reason for a defective exposure meter, it is recommended that a careful check be made of the characteristics of the trouble before disassembling the exposure meter.

Characteristics

a. Meter indicator does not move at all
b. Indicator twitches when the shutter speed dial is rotated and is unstable.
c. Indicator moves with film winding action and is unstable.
d. Indicator moves when the switch shaft is moved with switch-on and is unstable.
e. Check at three positions with the Exposure Meter Tester.

EV6 and EV15 are -3 steps.
EV11 is -6 steps.
EV6 and EV11 are normal.
EV15 is -5 steps.

5.1 Meter indicator does not move at all

Reason

a. Battery
b. Black CdS lead wire is broken.
c. Exposure meter coil is broken or soldering is detached.
d. Short-circuiting between the minus side of the battery and the exposure meter.

Repair

In the case of a:

1) Exchange battery.
Clean the contact section of the battery and bend the contact plate slightly so that contact is good.

In the case of b, c, and d:

1) Take off the front cover plate. (page 1)
2) Take off the left top cover plate. (page 1)

Exposure meter

3) Check breakage of the exposure meter coil or the soldering with a tester.
4) Check breakage and short-circuiting between the battery's minus pole and exposure meter, with a tester.

5.2 Indicator twitches when the shutter speed dial is rotated and is unstable.

Reason

Poor contact (top side) or grounding (bottom side) of the exposure meter.

Repair

1) Take off the front cover plate. (page 1)
2) Take off the left top cover plate. (page 1)
3) Wipe the contact points of the exposure meter and exposure meter holder with ether or alcohol to clean them of dirt andbend the contact plate slightly to improve contact.

5.3 Indicator moves with film winding action and is unstable, or is unstable with shutter release action.

Reasons

a. Breakage of the CdS lead wires.
b. Defective soldering of the CdS lead wires and electrodes.
c. Short-circuiting of the CdS lead wires and/or electrodes.

Repair

Exchange with a new CdS photo-cell layer.

IMPORTANT

Since this repair is not only time-consuming but very difficult, it is recommended that other parts be checked first of all, in order to eliminate the possibilities of a mistaken repair.

Other Points to be Checked(Refer to wiring circuit):

1) R3, R4 and R5 resistors.
2) Contact of exposure meter. (Check by changing meters.)
3) Internal resistance(1.2K) of the exposure meter. (Check by changing meters.)
4) Soldering of the wiring cicuit.
5) Contact of the battery. (Check by changing batteries.)
6) Improper contact of the switch.

5.4 Indicator moves when the switch is moved, after switch-on, and is unstable.

Reason

a. Improper contact of the switch.

Repair

1) Take off the base plate. (page 1)
2) Exchanging the switch.

5.5 Measurement results of the exposure meter are -3 steps for EV6 and EV15 and -6 steps for EV11

Reason

The above measurement results indicate that there is a breakage in the white CdS lead wire.

Repair

1) Take off the front cover plate. (page 1)
2) Take off the left top cover plate. (page 1)
3) Check soldering of the white lead wire between resistor R4 and the CdS photo-cell layer; if soldering is loose or detached, re-solder firmly.
4) If there is breakage in the lead wire at a point inside the opening of the mirror box or at the CdS electrode section, exchange the mirror box or CdS photo-cell layer.

5.6 Measurement results of the exposure meter are normal for EV6 and EV11 but -5 steps for EV15.

Reason

The above measurement results indicate that there is a breakage in the green lead wire.

Repair

Same as for the preceding 5.5 section.

5.7 Measurement results indicate disorder which is stable and can be re-adjusted(approximately ±1.5 step).

Repair

1) Take off the front cover plate. (page 1)
2) Take off the top left cover plate. (page 1)
3) Re-adjust. (See 1) Adjustment of error inclination, and 2)
   Exposure meter revolution, on page 36.)

   NOTE:

   Fine adjustments(of the eccentric shaft) of the exposure meter can be made without detaching the left top cover plate.

5.8 Measurement results are not those abovenoted and the disorder is beyond re-adjustment.

Reasons

a. Changes in the resistors R3, R4 and R5.
b. Improper deflection of the meter.
c. Changes in the CdS photo-cells.

Repairs.

In the case of a.

1) Take off the front cover plate. (page 1)
2) Take off the left top cover plate. (page 1)

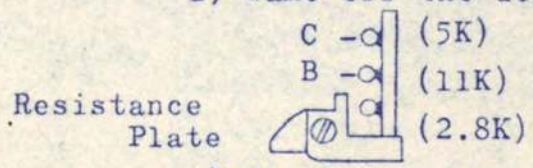

3) Check resistance with a tester (after detaching the soldering on the white and green CdS lead wires).
   Resistance between A and B =2.8 + 11 = 13.8 K
   Resistance between A and C =2.8 + 5 = 7.8 K
4) Exchange if resistance values are not as abovenoted.

In the case of b:

If mius with the shunt resistor detached, them exchange for an exposure meter which has a larger deflection angle with the same current.

In the case of c:

Finally, if the CdS photo-cell layer is defective, it must be exchanged.

FLASH SYNCHRONIZATION SKETCH

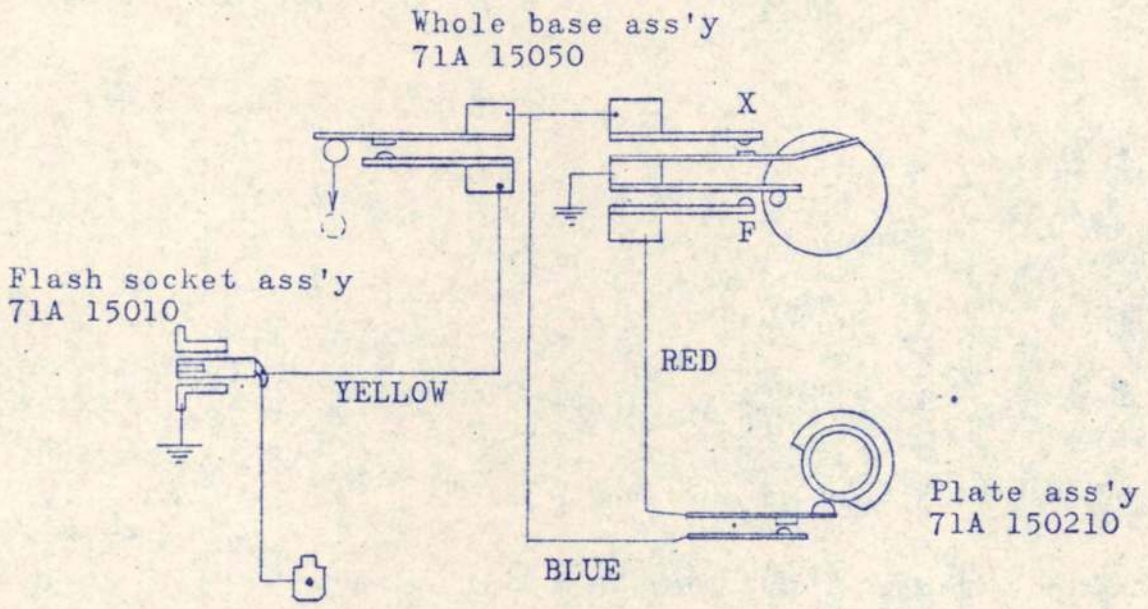

Table 1

INSPECTION STANDARD FOR SHUTTER

Nominal Shutter Speed	Standard Value (millisecond)	Tolerance (millisecond)	Remarks
1	1000	760 -1320	
2	500	380 - 660	
4	250	180 - 330	±0.4 Step (+32%, -24%)
8	125	95 - 165	
15	62.5	47.5- 82.5	
30	32.1	24.4- 42.5	
60	15.6	16.6- 20.6	+0.4 Step(+32%) -0 Step(-0%)
125	7.81	5.15 -11.7	±0.6 Step (+52%, -34%)
250	3.91	2.58 - 5.95	
500	1.95	1.28 - 2.96	
1000	0.976	0.65 - 1.48	±0.6 Step (+52%, -34%)

EXPOSURE METER SKETCH

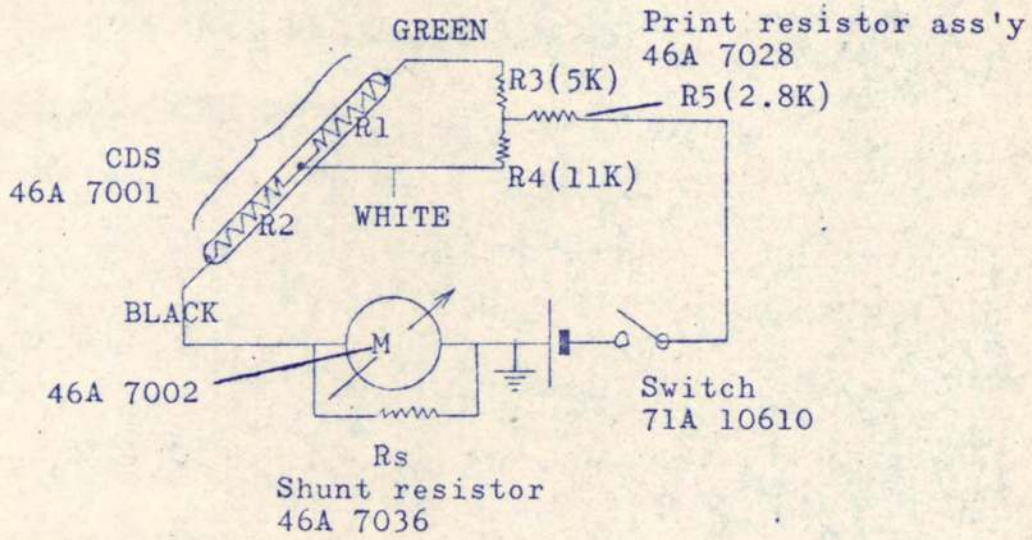

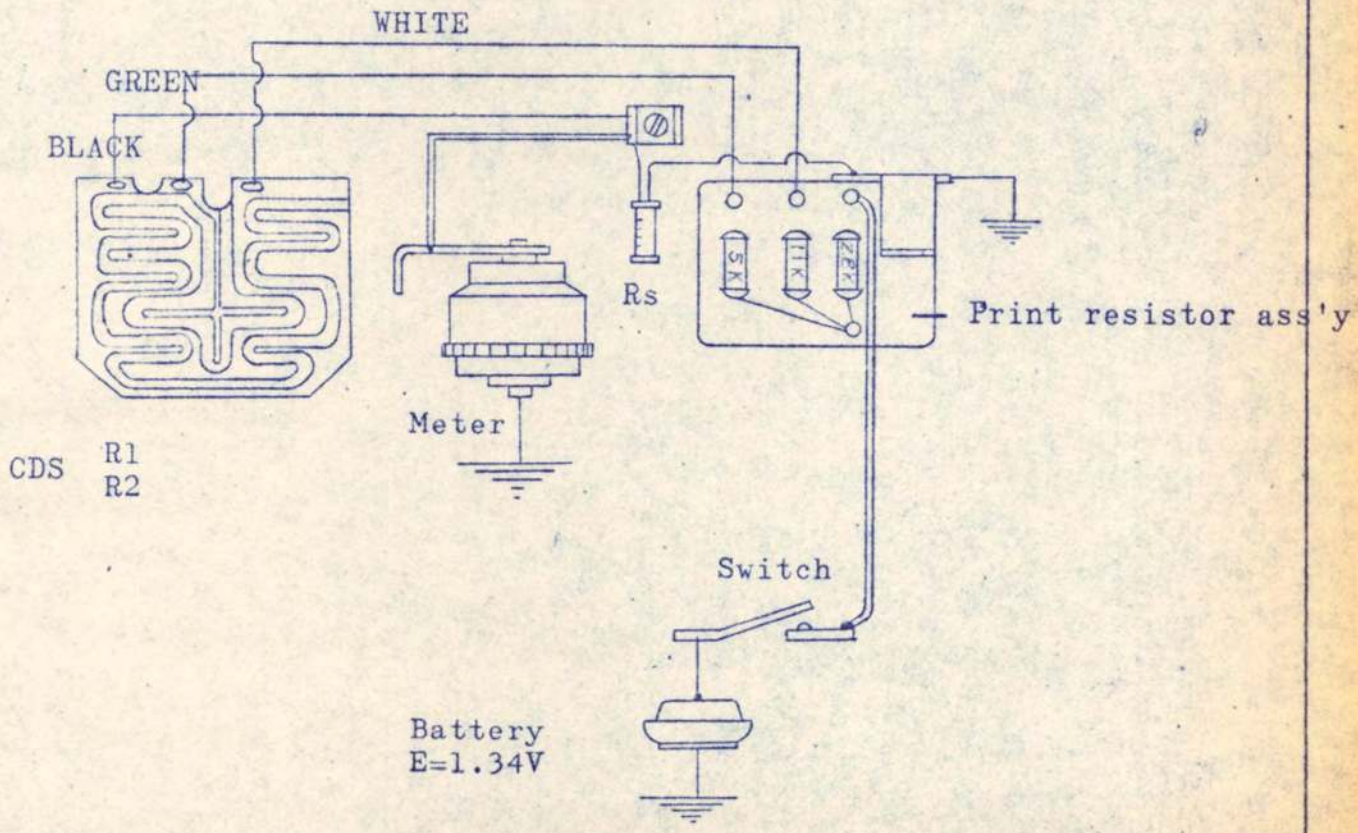

Table 2

Conditions for Exposure Combination at the Measuring Points

(Measure at 3 points):

Brightness of Diffusion Plate $B(cd/m^2)$	EV and its Combinations				Tolerance
	EV	ASA	Speed	F/Number	(EV)
8.0	6	25	1/2	2.8	±0.8
256	11	25	1/60	2.8	±0.8
4096	15		1/1000	2.8	±0.8

UNIT OF BRIGHTNESS

Photometric Quantity		Unit
Open Illumination	Lumination Flux	Lumen (radiation energy/hour)
	Illumination	Lux (Lumen/m^2)
Light Source	Luminous Intensity	Candela (Lumen/solid angle)
	Brilliance	Candela (Candela/m^2) Nt, Ca/cm^2(stilb), Ca/ft^2
	Luminous Divergence	Lumen (Lumen/m^2) : Germany - Apostilb(asb), U.S.A. - Lambert(L), England - Foot(fL)

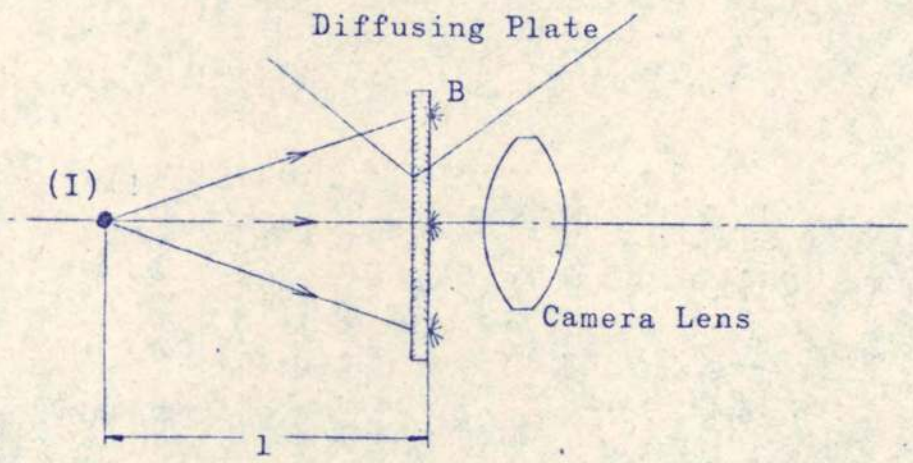

T=Exposure Time

A=F/number

S=Film speed (ASA)

K=Constant

B=Screen brilliance

I=Brilliance (cd/m^2)

l=Distance(meter) between the lamp filament and the screen surface.

t=Transmittance of diffusing plate

EX. if K=1.162, S=100

$$B=\frac{tI}{\pi l^2}$$

$$=K\frac{A^2}{TS}X10.76$$

$$=K\frac{2EV}{S}X10.76$$

$$=0.125 \text{ X } 2EV$$

$$=2^{EV-3}$$

TABLE OF BRILLIANCE AND LUMINOUS DIVERGENCE

	Cd/cm^2 (stilb)	cd/m^2 (nt)	Apostilb (asb)	Lambert (L)	cd/ft^2	Foot-Lambert (fL)
Cd/cm^2 (stilb)		10^4	$\pi \times 10^4$	π	$m \times 10^{-4}$	$\pi m \times 10^{-4}$
cd/m^2 (nt)	10		π	$\pi \times 10$	m	$m\pi$
Apostilb (asb)	$\frac{1}{\pi} \times 10^4$	$\frac{1}{\pi}$		10^4	$\frac{m}{\pi}$	m
Lambert (L)	$\frac{1}{\pi}$	$\frac{1}{\pi} \times 10^4$	10^4		$\frac{m}{\pi} \times 10^{-4}$	$m \times 10^4$
cd/ft^2	$\frac{1}{m} \times 10^{-4}$	$\frac{1}{m}$	$\frac{\pi}{m}$	$\frac{\pi}{m} \times 10^{-4}$		π
Foot-Lambert (fL)	$\frac{1}{\pi m} \times 10^{-4}$	$\frac{1}{\pi m}$	$\frac{1}{m}$	$\frac{1}{m} \times 10^{-4}$	$\frac{1}{\pi}$	

ex. $1 cd/m^2 = 10^4 \times cd/cm^2$

$1 cd/m^2 = m\pi \times$ Foot-Lambert

$\pi = 3.1416$

$m = (0.3048)^2 = 0.0929$

$\frac{1}{\pi} = 0.3183$

$\pi m = 0.2919$

TOPCON SUPER DM (72A)

TOOL for REPAIR

1974 — May

TOKYO KOGAKU KIKAI K.K

TOKYO JAPAN

TOOL NO.	NAME	SKETCH	RELEVANT PARTS	PURPOSE
AA 0108	Clamp wrench	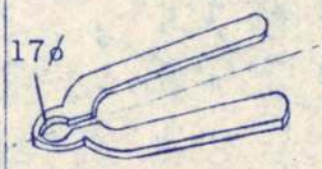	71A 2066	For Disassembling and Assembling
32A 1037-T	Nut driver	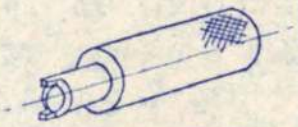	32A 1037	For Disassembling and Assembling
AA 0101	Coin driver		32A 1072 46A 1072	For Disassembling and Assembling
32A 1330-T	Rewind shaft holder	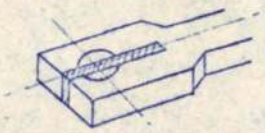	32A 10330	For Disassembling and Assembling
32A 1503-T	Flash socket ring plate wrench	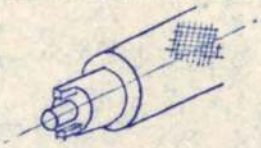	32A 1503	For Disassembling and Assembling
71A 2063-T	Right top-cover plate nut driver		71A 2063	For Disassembling and Assembling
71A 2093-T	G-ring plier		71A 2093	For Disassembling and Assembling
71A 3001-T		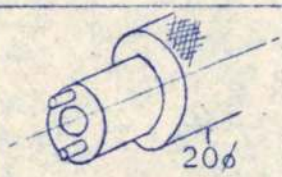	71A 3001	For Disassembling and Assembling
32A 3032-T	Gear shaft special screwdriver	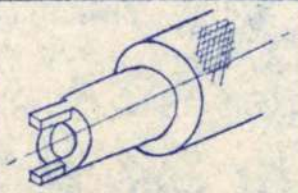	32A 3032	For Disassembling and Assembling
32A 4008-T	Pushing plate for spring	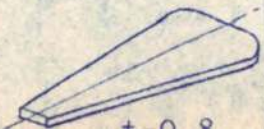	32A 4008	Assembly of lens locking lever

TOOL NO.	NAME	SKETCH	RELEVANT PARTS	PURPOSE
46A 5090-T	Tooling set screw	M1.4	71A 50090	For Disassembling and Assembling
32A 8003-T	Eyepiece plate wrench		32A 80030	For Disassembling and Assembling
56A 3053-T	Screwrdiver (Self-timer)		56A 3053	For Disassembling and Assembling
AC 0101	Rail gauge			Adjustment and Inspection of Flange Focal Distance
AB 0101	Mount gauge A	44.7		Adjustment and Inspection of Flange Focal Distance
AB 0201	Mount gauge B			Adjustment and Inspection of Flange Focal Distance
71A 1024-T	Shutter button plier	16.9	71A 1024	For Disassembling and Assembling
32A 9023-T	Special screw driver			For Disassembling and Assembling

TOPCON SUPER DM

72A

SERVICE PARTS LIST

1974.8
1973.4

TOKYO OPTICAL CO., LTD.
TOKYO JAPAN

CONTENTS

Illustration (to find out Parts No. from illustration)

1. Top cover and bottom cover ---------- 1 - 2
2. Rewind mechanism ---------- 3 - 4
3. Winding mechanism ---------- 5 - 6
4. Instant return mirror mechanism ---------- 7 - 8
5. Meter switch ---------- 9 - 10
6. Shutter assembly ---------- 11 - 14
7. Shutter release button ---------- 15 - 16
8. Mirror box assembly ---------- 17 - 18
9. Lens mount and focusing screen ---------- 19 - 22
10. Meter system (1) ---------- 23 - 24
11. Meter system (2) ---------- 25 - 26
12. Flash synchronization ---------- 27 - 28
13. Back cover ---------- 29 - 30
14. Penta prism finder ---------- 31 - 32

Parts list (to find out illustration from Parts No.)

1. Glass parts ---------- 33
2. Original Parts ---------- 34 - 41
3. Screw ---------- 42 - 43
4. Washer ---------- 44

NOTE

Always give Parts No. and Name when Ordering parts.

No.	Parts No.	Parts Name	Quantity	Price	Remarks
1	32A 1503	Flash socket ring	1		
2	72A 10020	Topcover(right)ass'y white	1		
	72AE 10020	Topcover(right)ass'y black	1		
3	72A 10030	Topcover(left)ass'y white	1		
	72AE 10030	Topcover(left)ass'y black	1		
4	32A 1011	Counter plustic	1		
5	CR1.4x2S xCr	Screw	2		
	CR1.4x2S xBCr	Screw (black)	2		
6	72A 1123	Indicator prism	1		
7	71A 1145	Strap lug ring(left)	1		
8	32A 1005	Shoulder strap hock	2		
9	CRs1.7x6SxNi	Screw	2		
10	71A 1006	Back cover hinge	1		
11	CQs1.7x3SxNi	Screw	4		
12	71A 1007	Back cover hinge	1		
13	71A 1073	Lock plate	1		
14	32A 1074	Screw	2		
15	32A 1076	Spring	1		
16	32A 1075	Screw	1		
17	71A 1077	Cover	1		
18	CQs1.7x3SxNi	Screw	2		
19	71A 10520	Tripod socket base	1		
20	CQs2x4SxNi	Screw	4		
21	71A 1079	Leather (right)	1		
22	32A 1078	Leather (left)	1		
23	72A 1004	Bottom cover white	1		
	72AE 1004	Bottom cover black	1		
24	CQs1.7x3SxCr	Screw	1		
	CQs1.7x3SxBCr	Screw (black)	1		
25	CQs1.7x4SxCr	Screw	1		
	CQs1.7x4SxBCr	Screw (black)	1		
26	32A 1053	Base white	1		
	32AE 1053	Base black	1		
27	CQs1.7x4SxCr	Screw	3		
	CQs1.7x4SxBCr	Screw (black)	3		
28	32A 1081	Cloth	1		
29	32A 1086	Moltplene	2		
30	72A 1154	Strap lug ring(right)	1		

I Top cover and bottom cover

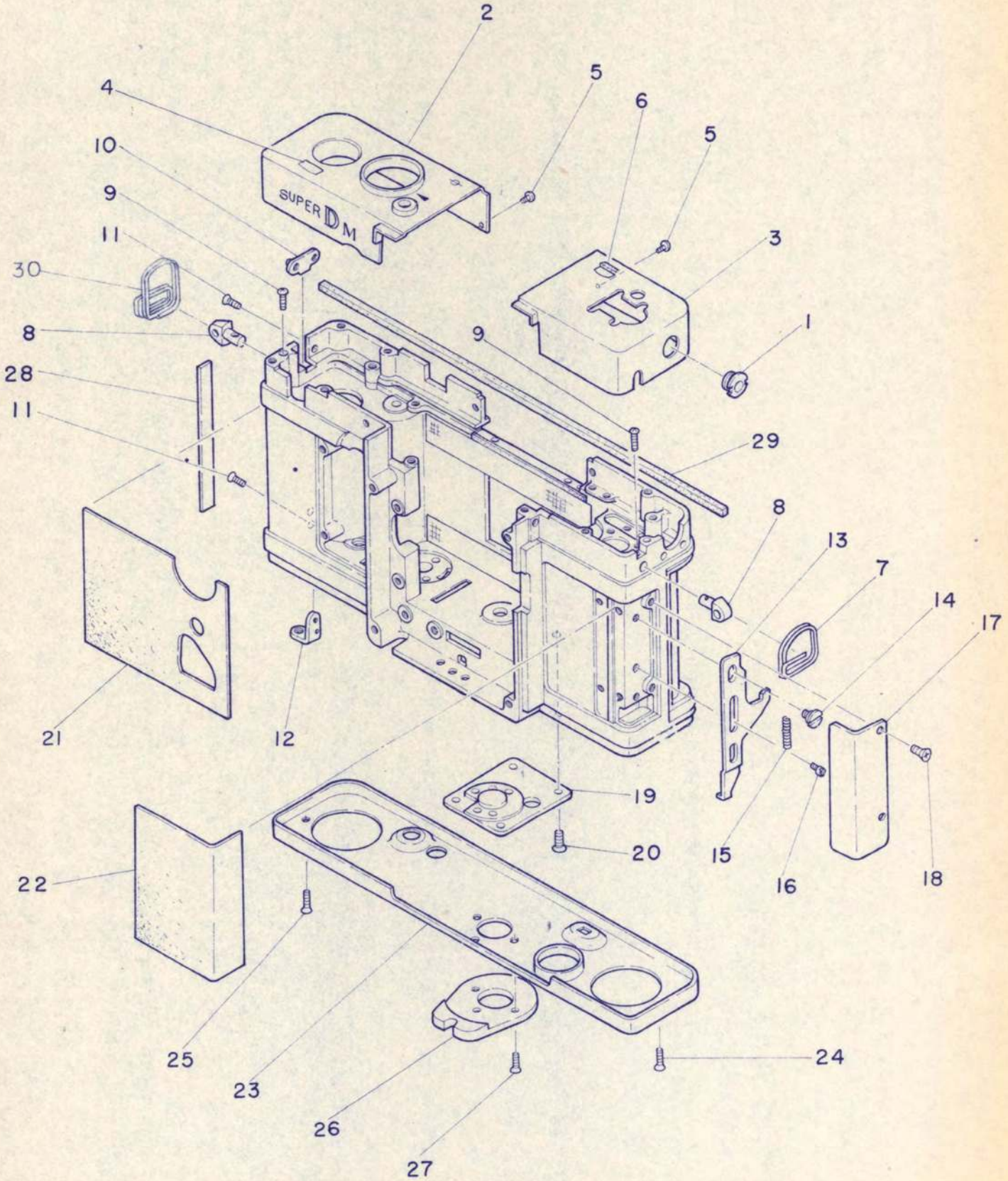

No.	Parts No.	Parts Name	Quantity	Price	Remarks
1	71A 10440	Rewind knob ass'y white	1		
	71AE 10440	Rewind knob ass'y black	1		
2	32A 1037	Nut	1		
3	32A 1043	Disc	1		
4	CQs1.7x6SxCr	Screw	4		
	CQs1.7x6SxBCr	Screw black	4		
5	71A 10390	Flash unit bayonet ass'y white	1		
	71AE 10390	Flash unit bayonet ass'y black	1		
6	46A 1031	Base	1		
7	CR1.7x6SxNi	Screw	3		
8	32A 1038	Spring	1		
9	46A 1032	Metal	1		
10	CRs1.7x2.5SxNi	Screw	3		
11	32A 10330	Rewind shaft ass'y	1		
12	71A 1151	Lug plate	1		

2 Rewind mechanism

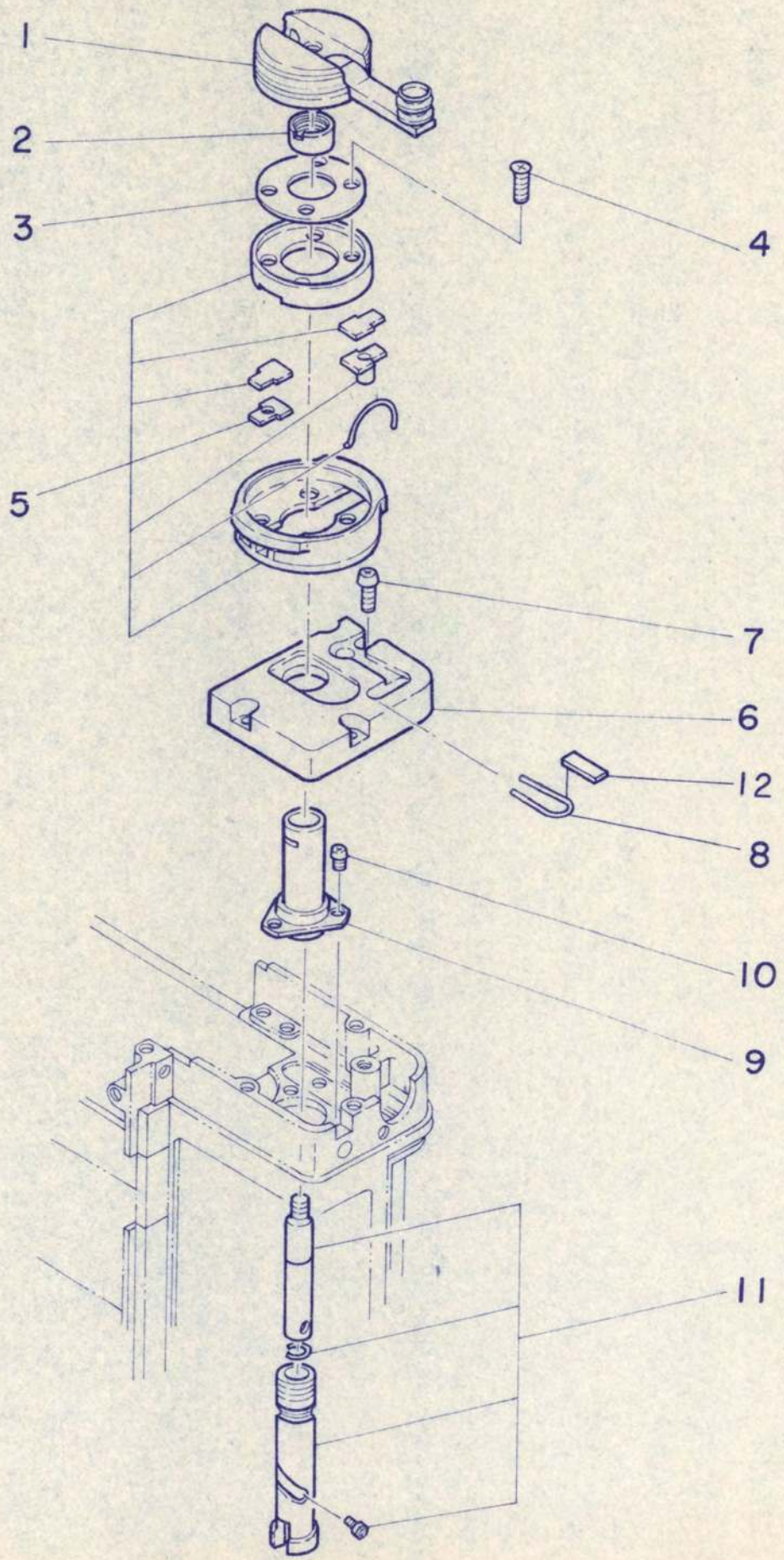

No.	Parts No.	Parts Name	Quantity	Price	Remarks
1	71A 2066	Screw white	1		
	71AE 2066	Screw black	1		
2	71A 2002	Washer	1		
3	71A 20650	Winding lever white	1		
	71AE 20650	Winding lever black	1		
4	56A 2103	Plate	1		
5	71A 2064	Clutch	1		
6	71A 2063	Nut white	1		
	71AE 2063	Nut black	1		
7	71A 20450	Counter ass'y	1		
8	CR1.7x3SxNi	Screw	4		
9	71A 2072	Screw	1		
10	71A 2073	Spring	1		
11	71A 2068	Lever ass'y	1		
12	71A 20040	Spool ass'y	1		
13	71A 20130	Winding shaft ass'y	1		
14	71A 2023	Metal (bottom)	1		
15	71A 20810	Lever ass'y	1		
16	CRs2x3SxNi	Screw	2		
17	32A 20170	Disc ass'y	1		
18	32A 2019	Screw	1		
19	71A 2022	Plate	1		
20	CR2x4SxNi	Screw	2		
21	32A 2005	Screw	1		
22	71A 20080	Gear ass'y	1		
23	E - 24	E-ring	1		
24	32A 2043	Screw	1		
25	71A 2038	Metal	1		
26	71A 2102	Sprocket	1		
27	71A 2096	Washer	1		
28	71A 20320	Sprocket shaft ass'y	1		
29	71A 2037	Plate	1		
30	CRs1.7x2.5SxNi	Screw	1		
31	71A 2036	Rewind button	1		
32	32A 2042	Spring	1		
33	32A 2041	Rewind lever	1		

3 Winding mechanism

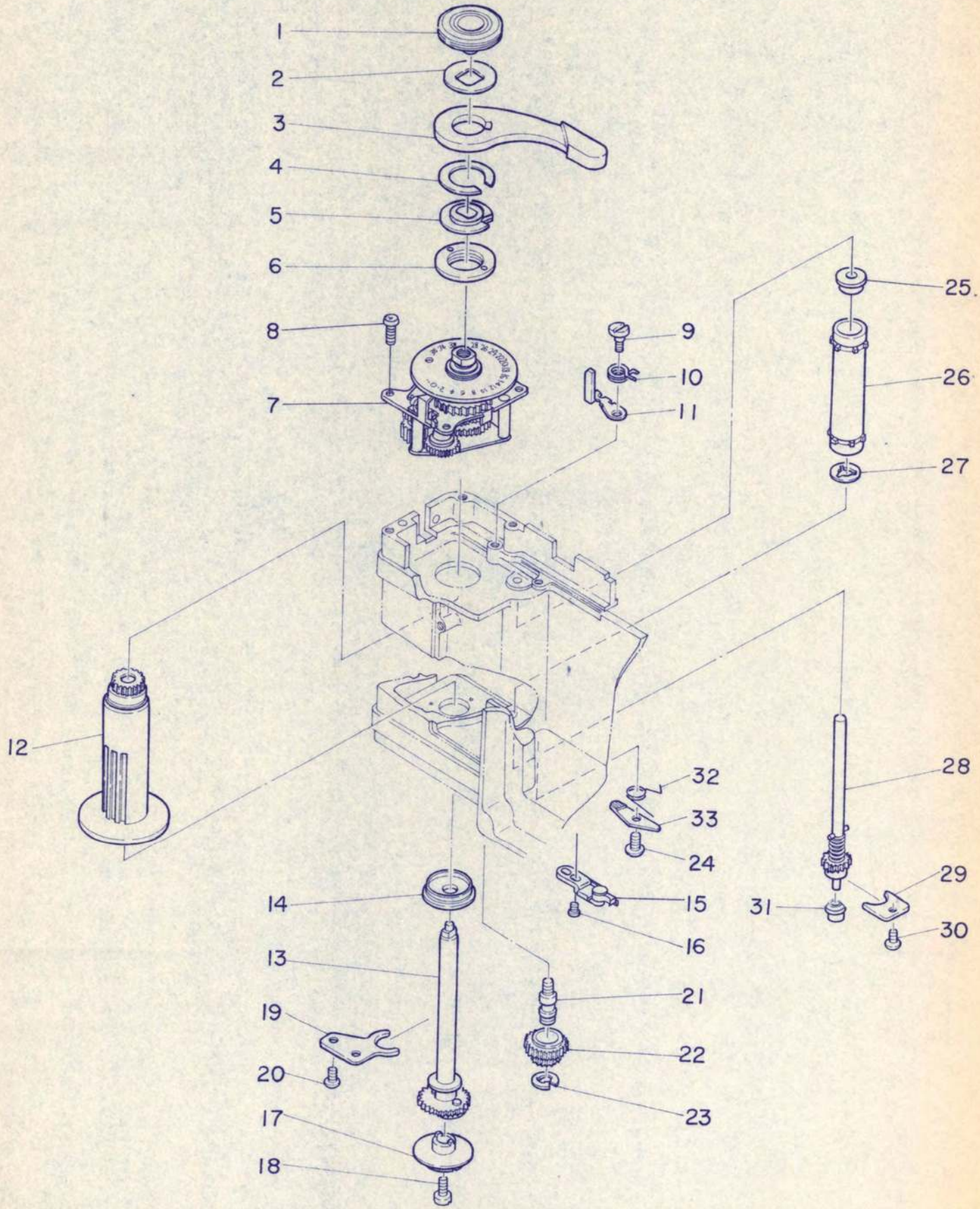

No.	Parts No.	Parts Name	Quantity	Price	Remarks
1	CR1.4x3SxNi	Screw	3		
2	32A 3034	Safety plate	1		
3	32A 3033	Gear	1		
4	32A 3032	Gear shaft	1		
5	71A 3029	Screw	1		
6	71A 30240	Crank lever ass'y	1		
7	CR1.7x3.5SxNi	Screw	1		
8	32A 3045-A	Eccentric ring	2		
	32A 3045-B	Eccentric ring	2		
9	32A 3044	Lever	1		
10	32A 3046	Spring	1		
11	72A 30420	Safety lever ass'y	1		
12	32A 3041	Clutch gear	1		
13	32A 30360	Clutch gear ass'y	1		
14	71A 3002	Screw	1		
15	32A 5026	Screw	1		
16	72A 30130	Spring	1		
17	71A 30030	Set lever ass'y	1		
18	80W 45002B	Washer	2		
19	71A 30070	Main spring ass'y	1		
20	71A 30050	Main spring lever ass'y	1		
21	90W 62001B	Washer	1		
22	71A 30090	T-shaped lever ass'y	1		
23	71A 3019	Spring	1		
24	71A 3001	Shaft	1		
25	32A 3047	Plate spring	1		
26	CR1.7x3SxNi	Screw	1		
27	71A 3021	Spring	1		
28	71A 30120	Release clutch	1		
29	CR1.7x2.5SxNi	Screw	1		
30	V1.4x1.6SxNi	Screw	1		
31	32A 3023	Eccentric ring	1		
32	72A 3053	Spring	1		
33	CQs1.7x1.8SxNi	Screw	1		

4 Instant return mirror mechanism

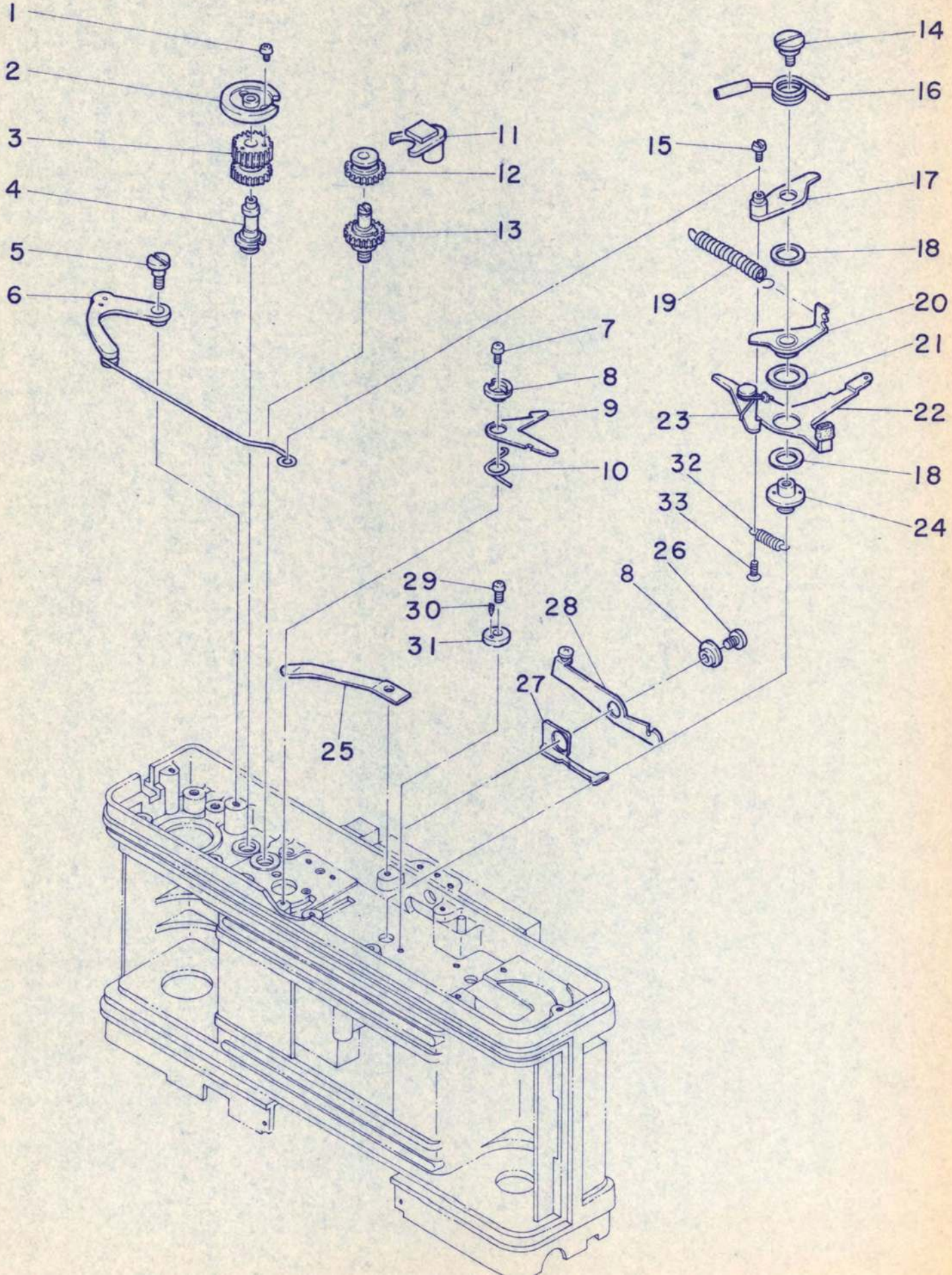

No.	Parts No.	Parts Name	Quantity	Price	Remarks
1	46A 1072	Battery compartment cover	1		
2	46A 1101	Battery	1		
3	71A 10540	Battery base ass'y white	1		
	71AE 10540	Battery base ass'y black	1		
4	CR1.7x2.5SxNi	Screw	3		
5	32A 10660	Button white	1		
	32AE 10660	Button black	1		
6	32A 1068	Spring	1		
7	32A 1069	Screw	1		
8	32A 1072	Motor drive shaft cover	1		
9	32A 1071	Motor drive attachment screw	1		
10	CRsl.7x3.5SxNi	Screw	2		
11	71A 1063	Switch cover	1		
12	71A 1062	Moltplene	1		
13	71A 10610	Switch ass'y	1		
14	CQsl.7x2.5SxNi	Screw	2		

5 Meter switch

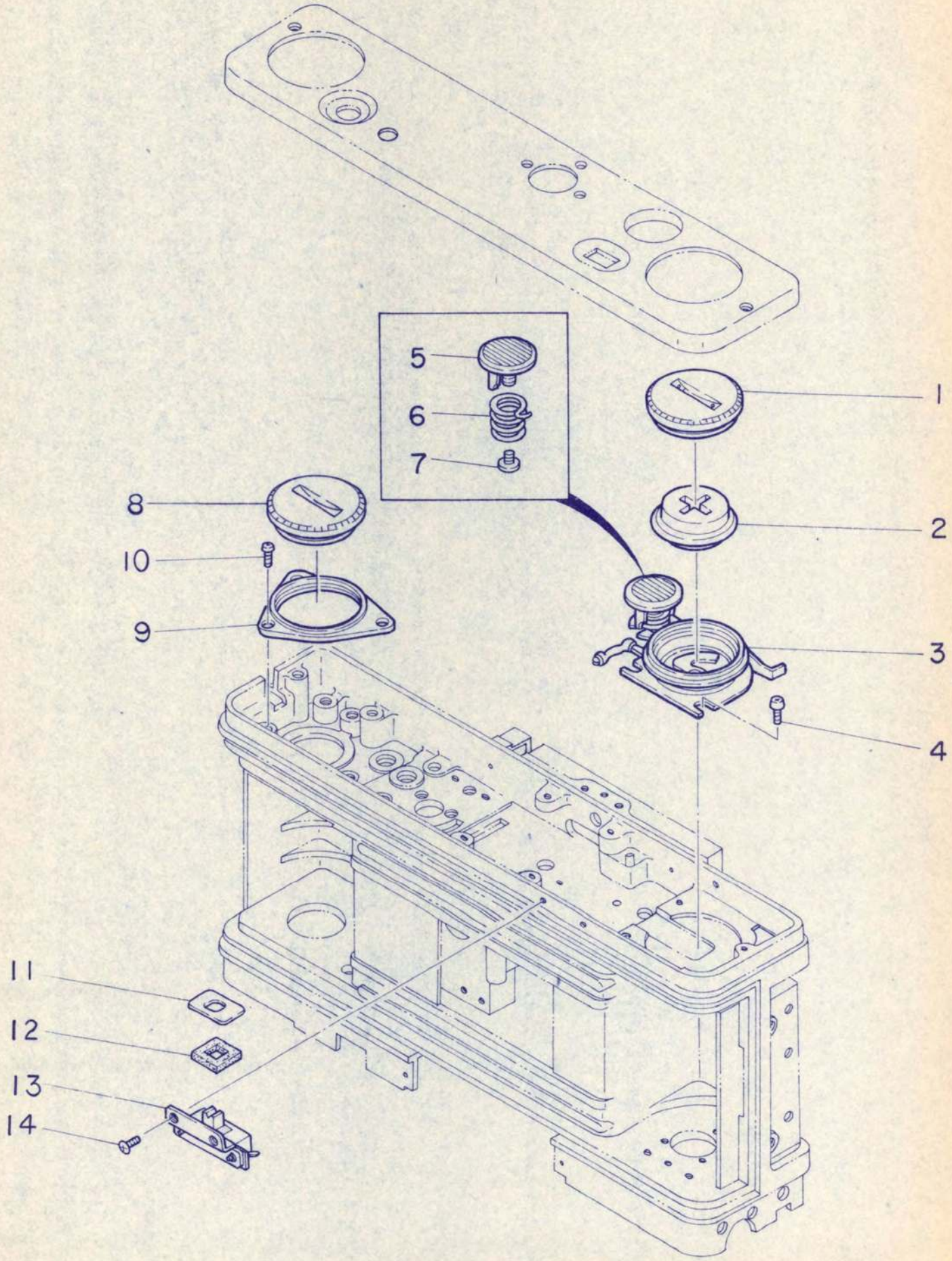

No.	Parts No.	Parts Name	Quantity	Price	Remarks
1	CQs1.4x2.5SxBCr	Screw	1		
2	71A 5013	Speed scale	1		
3	71A 51080	Film speed plate	1		
4	46A 5107	Spring	1		
5	71A 50120	Speed ring ass'y	1		
6	71A 50090	Gear ass'y	1		
7	U1.7x1.8SxNi	Set screw	2		
8	V1.7x1.8SxNi	Set screw	1		
9	46A 51010	Gear and Chain ass'y	1		
10	46A 5104	Ring	1		
11	71A 50060	Speed cam ass'y	1		
12	72A 5034	Spring	1		
13	CRs1.7x3SxNi	Screw	2		
14	72A 50010	Shutter base ass'y	1		
15	CQs1.7x4SxNi	Screw	2		
16	32A 5023-A	Screw $D^{\phi}=2.3$	1		
	32A 5023-B	Screw $D^{\phi}=2.5$	1		
	32A 5023-C	Screw $D^{\phi}=2.7$	1		
	32A 5023-D	Screw $D^{\phi}=2.9$	1		
	32A 5023-E	Screw $D^{\phi}=3.1$	1		
	32A 5023-F	Screw $D^{\phi}=1.7$	1		
	32A 5023-G	Screw $D^{\phi}=1.9$	1		
	32A 5023-H	Screw $D^{\phi}=2.1$	1		
17	32A 5028	Spring	1		
18	32A 5027	Screw	1		
19	32A 5026	Screw	3		
20	71A 51000	Main shaft ass'y	1		
21	32A 5056	Screw	1		
22	32A 5049	Metal	1		
23	32A 5051	Metal base	1		
24	32A 5052	Ring	1		
25	32A 54000	Retard gear train ass'y	1		
26	CR1.7x8S xNi	Screw	3		
27	46A 5112	Stopper	1		
28	CR1.7x4SxNi	Screw	2		
29	32A 5066	Screw	1		
30	32A 5065	Spring	1		

6 Shutter assembly

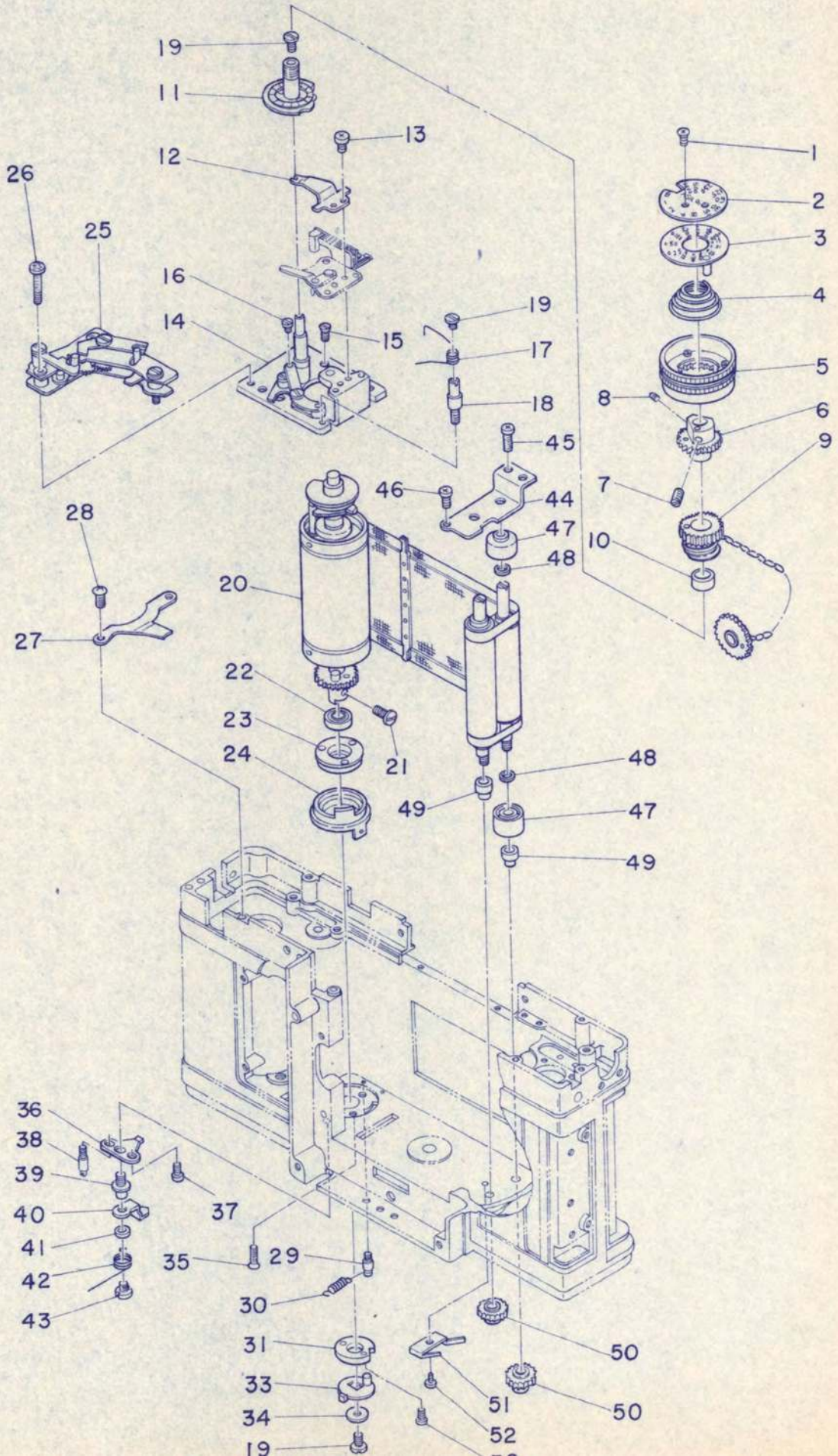

No.	Parts No.	Parts Name	Quantity	Price	Remarks
31	32A 5055	Pawl	1		
32	CRsl.4x2SxNi	Screw	2		
33	71A 50570	Synchro ring ass'y	1		
34	60W 18003B	Washer	1		
35	CQsl.4x2SxNi	Screw	3		
36	32A 50630	Stopper ass'y	1		
37	CRl.7x3SxNi	Screw	1		
38	32A 3011	Screw Dia=1.7mm	1		
	32A 3011-6-C	Screw Dia=2.0mm	1		
39	32A 5061	Screw	1		
40	32A 5064	Bouncing prevention lever	1		
41	32A 5091	Ring	1		
42	32A 5059	Spring	1		
43	32A 5092	Screw	1		
44	46A 5067	Plate	1		
45	CRsl.7x3SxNi	Screw	2		
46	CRsl.7x2SxNi	Screw	1		
47	32A 5079	Pulley	2		
48	40W 26001S	Washer	2		
49	32A 5081	Collar	2		
50	32A 5082	Ratchet wheel	2		
51	71A 5083	Pawl	1		
52	CRl.7x2SxNi	Screw	1		

6 Shutter assembly

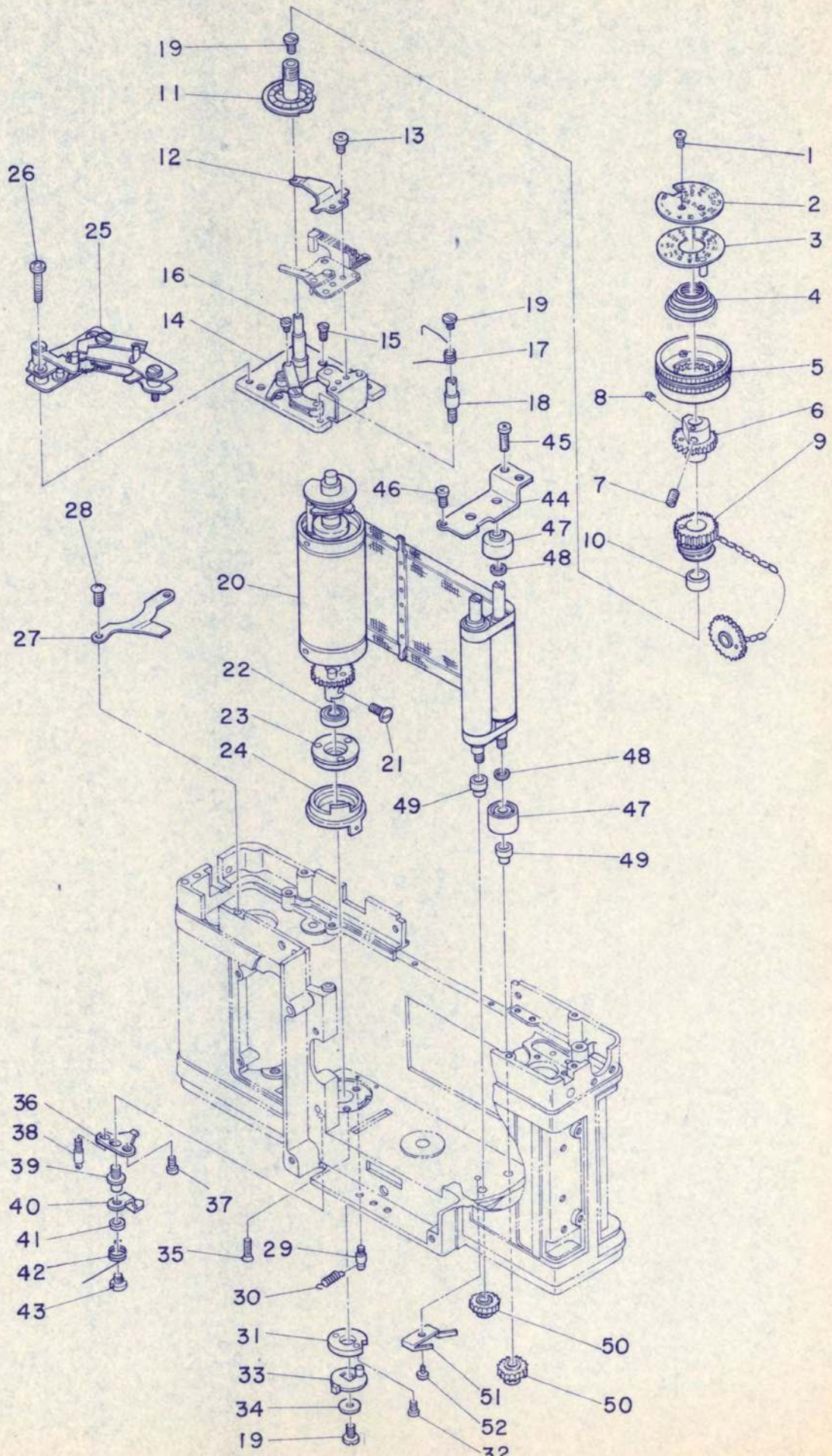

No.	Parts No.	Parts Name	Quantity	Price	Remarks
1	32A 10130	Slide plate ass'y	1		
2	32A 1014-A	Adjusting screw D =1.5Φ	1		
	32A 1014-B	Adjusting screw D =2Φ	1		
	32A 1014-C	Adjusting screw D =2.5Φ	1		
3	71A 1026	Adjusting lever	1		
4	32A 1029	Screw	2		
5	71A 10170	Shutter buttom ass'y	1		
6	71A 90010	Self timer ass'y	1		
7	CQs1.7x2.5SxNi	Screw	4		
8	CQs1.4x2.5SxNi	Screw	2		
9	71A 9001	Cover	1		
10	32A 9023	Nut - white	1		
	32AE 9023	Nut - black	1		
11	32A 9027	Set lever - white	1		
	32AE 9027	Set lever - black	1		
12	56A 3053	Screw - white	1		
	56AE 3053	Screw - black	1		
13	71A 9002	Plate	1		
14	71A 91000	Self-timer and shutter button ass'y - white	1		
	71AE 91000	Self-timer and shutter button ass'y - black	1		

7 Shutter release button

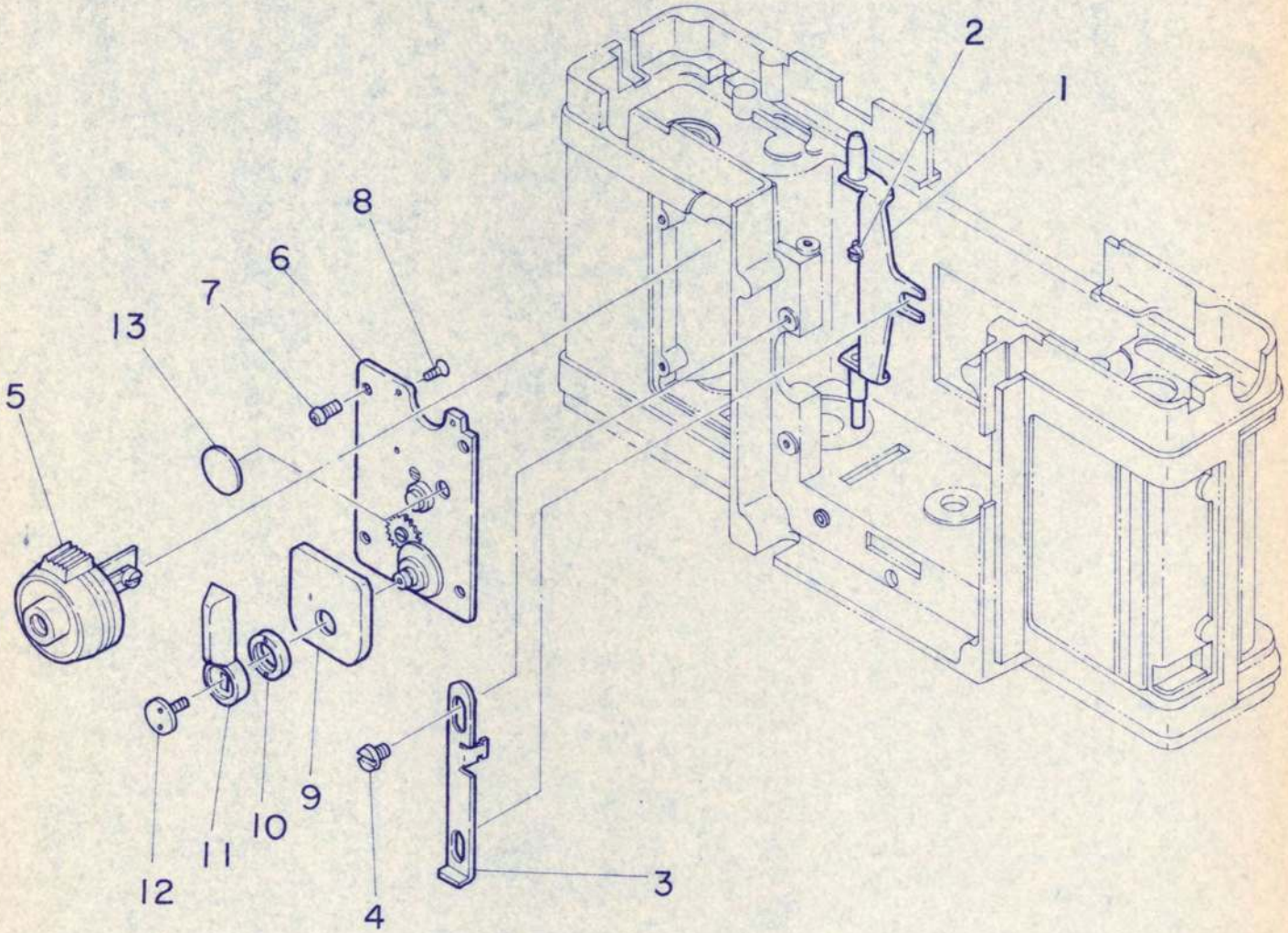

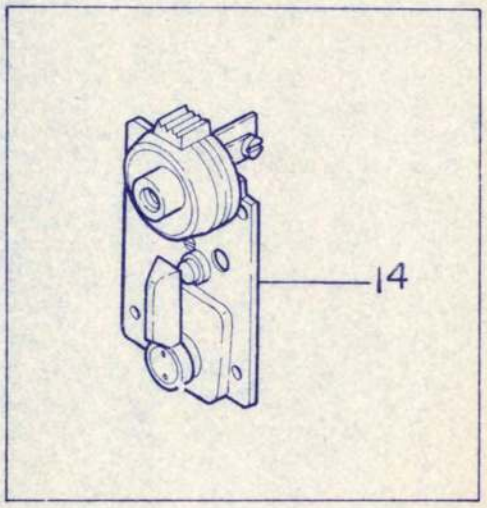

No.	Parts No.	Parts Name	Quantity	Price	Remarks
1	71A 4032	Light shield	1		
2	CR1.4x2SxNi	Screw	2		
3	71A 4017	Screw	1		
4	71A 40340	Mirror plate ass'y	1		
5	32A 4044	Pin	1		
6	23W 13002B	Ring	2		
7	32A 4077	Cloth cover	1		
8	32A 4074	Washer	2		
9	32A 4038	Washer	2		
10	56A 4099	Spring	2		
11	CRs1.4x3SxBZn	Screw	2		
12	46A G1	Mirror	1		
13	32A 4033	Frame	1		
14	CRs1.4x1.8SxBZn	Screw	4		
15	71A 4062	Depth of Preview lever	1		
16	60W 19002B	Washer	2		
17	32A 4058	Screw	2		
18	71A 4059	Depth of Preview button	1		
19	CQs1.7x3.5SxNi	Screw	2		
20	71A 4116	Leather	1		
21	32A 4057	Screw	1		
22	32A 4061	Spring	1		
23	71A 4021	Mirror holding lever ass'y	1		
24	71A 4022	Screw	1		
25	71A 4023	Spring	1		
26	71A 40150	Lever ass'y	1		
27	50W 36005B	Washer	1		
28	50W 21003B	Washer	1		
29	71A 4029	Screw	1		
30	71A 4016	Spring	1		
31	71A 4025	Plate	1		
32	T1.7x2.2SxBZn	Screw	1		
33	32A 1082	Ribbon	2		

8 Mirror box assembly

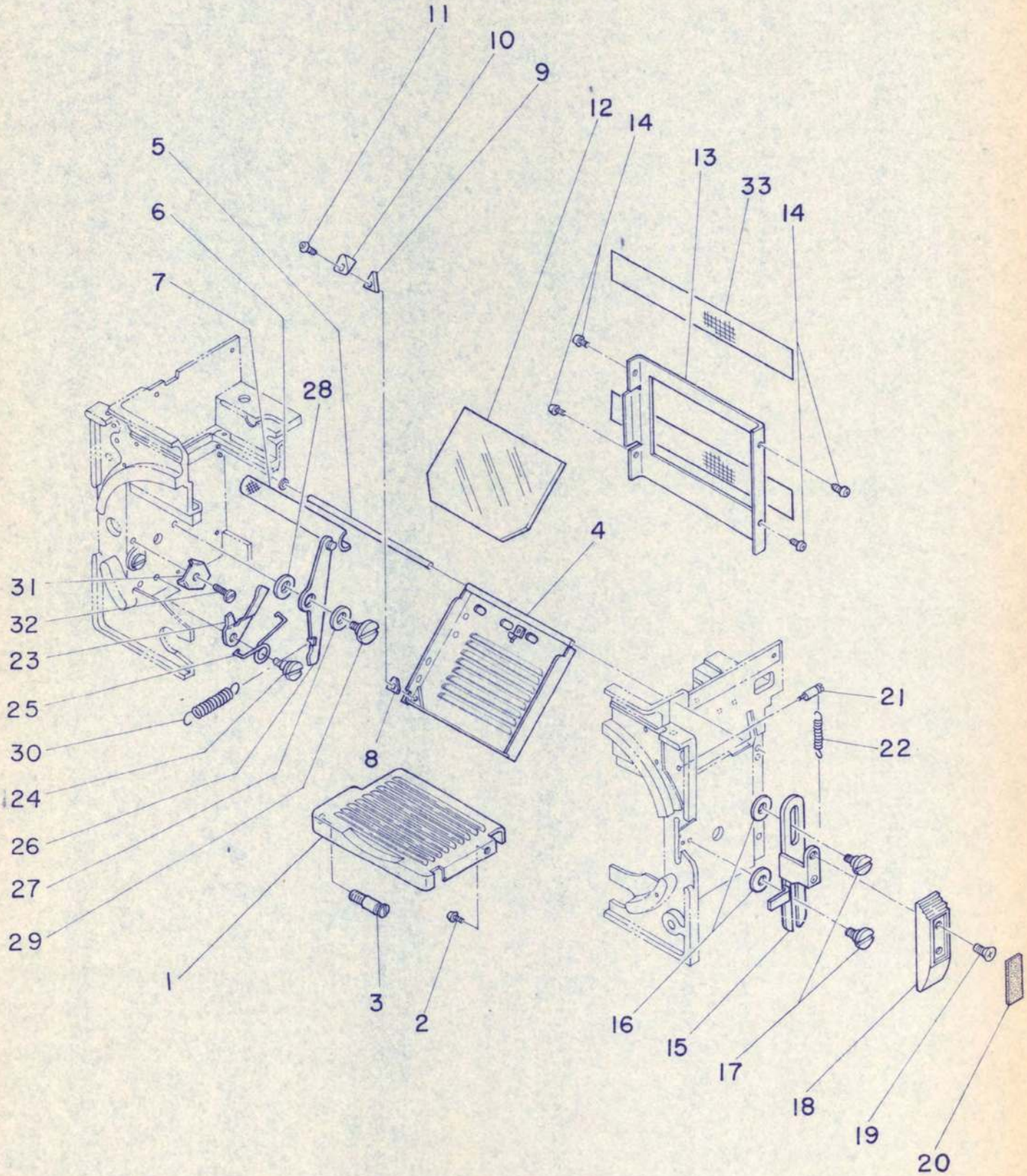

No.	Parts No.	Parts Name	Quantity	Price	Remarks
1	71A 4087	Plate	1		
2	72A 40780	Lever	1		
3	CR1.4x2SxNi	Screw	2		
4	71A 4082	Spring	1		
5	72A 40830	Cam	1		
6	72A 4086	Mirror up crank lever	1		
7	56A 3053	Screw - white	1		
	56AE 3053	Screw - black	1		
8	32A 40450	Rail ass'y (right)	1		
9	32A 4052	Screw	1		
10	CR1.7x2.2SxBZn	Screw	3		
11	32A 4049	Spring	1		
12	46A 40460	Rail ass'y (left)	1		
13	46A 41050	Frame ass'y	1		
14	46A 4113	Screw	2		
15	32A 4056	Catch	1		
16	32A 40550	Spring ass'y	1		
17	32A 4053	Spring	1		
18	32A 4054	Cover	1		
19	CR1.7x1.8SxBZn	Screw	2		
20	32A 4039	Spring	1		
21	CR2x5SxNi	Screw	4		
22	50A 3099-A	Washer t=0.03	4		
	50A 3099-B	Washer t=0.05	4		
	50A 3099-C	Washer t=0.1	4		
	50A 3099-D	Washer t=0.2	4		
23	CRs1.7x2SxBZn	Screw	2		
24	46A 4103	Screw	1		
25	72A 40030	Bayonet mount ass'y-white	1		
	72AE 40030	Bayonet mount ass'y-black	1		
26	32A 4008	Spring	1		
27	71A 40040	Catch lever white	1		
	71AE 40040	Catch lever black	1		
28	32A 4007	Screw	1		
29	46A 4101-A	Segmental gear t=2.2	1		
	46A 4101-B	Segmental gear t=2.3	1		
	46A 4101-C	Segmental gear t=2.4	1		

9 Lens mount and focusing screen

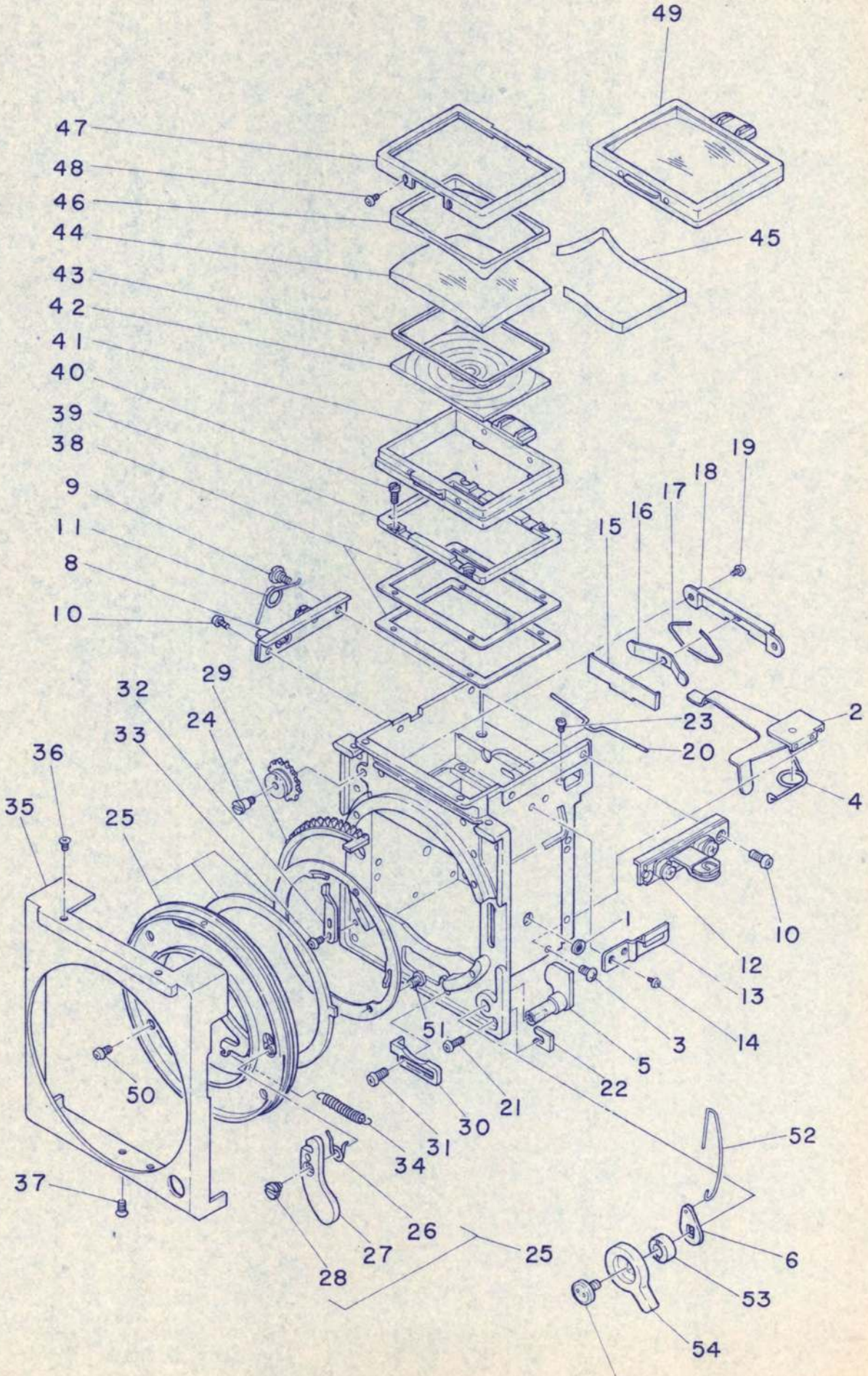

No.	Parts No.	Parts Name	Quantity	Price	Remarks
	46A 4101-D	Segmental gear t=2.5	1		
	46A 4101-E	Segmental gear t=2.6	1		
30	72A 4112	Stopper	1		
31	CR1.7x2.5SxNi	Screw	2		
32	46A 4104	Stopper	1		
33	CR1.7x2.5SxNi	Screw	2		
34	32A 40110	Spring ass'y	1		
35	72A 4002	Front cover (white)	1		
	72AE 4002	Front cover (black)	1		
36	CQs1.4x2SxCr	Screw	2		
	CQs1.4x2SxBCr	Screw (black)	2		
37	CQs1.7x3SxNi	Screw	2		
38	32A 4067-A	Washer t=0.1	2		
	32A 4067-B	Washer t=0.15	2		
	32A 4067-C	Washer t=0.2	2		
	32A 4267-D	Washer t=0.25	2		
	32A 4067-E	Washer t=0.3	2		
	32A 4067-F	Washer t=0.5	2		
39	32A 4066	Mask	1		
40	T1.4x2.5BxBNi	Screw	4		
41	32A 4064	Box	1		
42	32A G2	Ground glass	1		
43	46A 4109	Spacer	1		
44	32A G3	Condenser lens	1		
45	46A 4107	Tape	1		
46	32A 4065	Spacer	1		
47	32A 4063	Cover	1		
48	CR1.4x1.6SxBZn	Screw	4		
49	32A 40640	Focusing screen	1		
50	CRs1.7x3.5SxCr	Screw	4		
51	CRs1.7x2.5SxBZn	Screw	3		
52	72A 4091	Wire	1		
53	72A 4089	Collar	1		
54	72A 4088	Mirror up lever - white	1		
	72AE 4088	Mirror up lever - black	1		

9 Lens mount and focusing screen

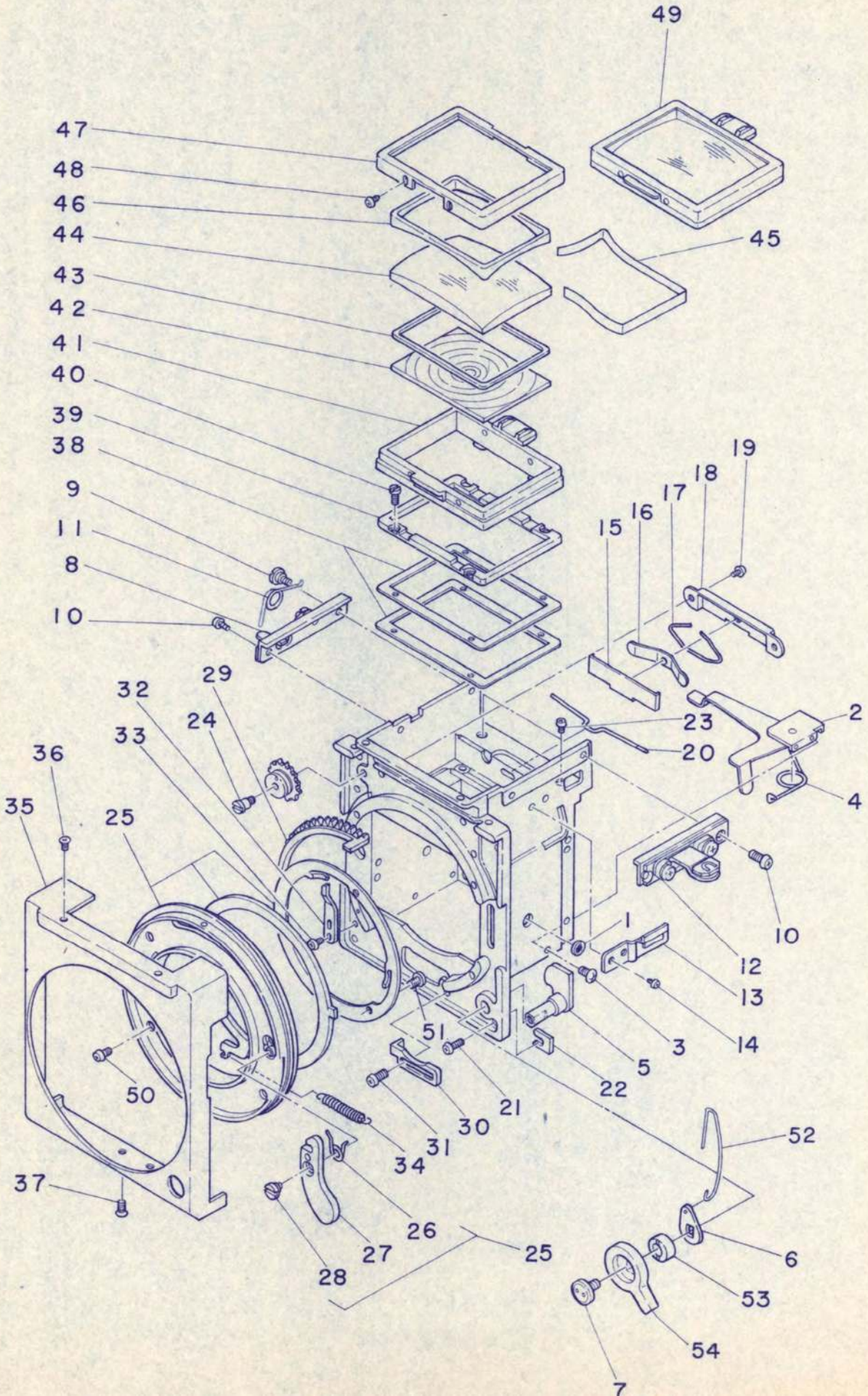

No.	Parts No.	Parts Name	Quantity	Price	Remarks
1	71A 70140	Pulley and Chain ass'y	1		
2	46A 7016	Pulley	3		
3	71A 7019	Eccentric shaft	1		
4	71A 7021	Screw	2		
5	71A 70260	1st Pulley ass'y	1		
6	CQsl.4x2.5SxNi	Screw	2		
7	46A 51010	Gear and Chain ass'y	1		
8	46A 7002	Meter	1		
9	46A 7005	Black plastic	1		
10	46A 40460	Rail ass'y (left)	1		
11	46A 70030	Prism and Holder ass'y	1		
12	CR1.7x3SxNi	Screw	2		
13	72A 70040	Window ass'y	1		
14	46A 7034	Screw	2		
15	46A 7028	Print resistor ass'y	1		
16	46A 7008	Screw	1		
17	46A 7007	Spring	1		
18	46A 7044	Screw	1		
19	46A 70360-A	Shunt resistor (Give the value of resistor) R=8KΩ	1		
	46A 70360-B	Shunt resistor (Give the value of resistor) R=15KΩ	1		
20	46A 7048	Screw	1		
21	71A 7039	Lug plate	1		
22	71A 7049	Washer	1		
23	71A 7032	Spring	1		
24	CRsl.7x2.5SxNi	Screw	1		
25	U1.7x2SxNi	Screw	1		